HOW TO ORDER
CHESTER ELECTRIC LOW HEADROOM CHAIN HOIST

When specifying a Chester Electric Low Headrom Chain Hoist, the following parameters should be considered. Determine the specific requirements and clearly state them when ordering. The following checklist will be of help:

1. Load weight to be lifted
2. Lift or reach required
3. Control drop required
4. Power supply available
5. How often load must be lifted (specify number of starts per cycle, number of cycles per hour, on-time per hour)
6. Operating environment (moisture, corrosive fumes, explosive vapors, temperature, etc.)
7. Beam sizes and weight (to determine trolley wheel specifications)
8. Trolley type (plain, hand-geared or motorized)
9. Controls (may be expressed as functions, such as Hoist Up-Down, Trolley Forward-Reverse, etc.)

LETTERS USED IN MODEL DESIGNATIONS:

ELP – Plain (Push/Pull) Trolley

ELG – Hand Operated Geared Trolley

ELM – Motorized Trolley

— OPTIONS —

VERSATILITY
The hoist design permits adaptation to a wide variety of applications. The unit can be built to suit most beams including wide flanges and patented track.

CHAIN CONTAINERS
Chain containers can be provided to collect the unused portion of the hoist lifting chain when the hook is in a raised position (optional, extra cost).

TROLLEY DRIVES
The hoist can be furnished with plain (push/pull), hand-geared or motorized trolley drives.

SPECIAL PAINT
The hoist can be provided with many finishes to meet customer requirements. Machine gray enamel is standard. Epoxy coating is available at extra cost.

SPECIAL CONTROL ENCLOSURES
Unless otherwise specified, NEMA 12 (industrial, dust-tight and drip-tight) enclosures will be supplied.
Optional enclosures are available for various non-hazardous locations, as well as certain hazardous locations.

EXPLOSION-PROOF UNITS
Units are available to meet customer specifications for equipment meeting Class I, Group D or Class II, Groups E, F or G criteria. Spark-resistant features are available when specified (optional, extra cost).
All units are designed in accordance with Chester Hoist's interpretation of the N.E.C. Explosion-proof components such as motor, control enclosure, limit switch, etc., carry the UL Label.

CIRCUITS AND CONTROL
All hoists and motorized trolleys are designed for use on 230/460 VAC, 3 phase, 60 Hz. Units for operation on 200 VAC, 575 VAC or 50 Hz systems are also available.
Special-purpose hoist duty contactors are standard. NEMA-rated contactors are available at extra cost.

ALL TYPES OF LIMIT SWITCHES
These hoists are furnished with redundant upper and lower limit switches. Additional switches or special arrangements are available at extra cost.

LOAD-LIMITING SWITCHES
An electrical (current-limiting) load limiter is available on models with single speed only (optional, extra cost)

TROLLEY BRAKE
A trolley motor brake can be supplied at extra cost.

PUSH BUTTON STATIONS
Some available options include extra push buttons to provide such functions as trolley, crane and start-stop control, tandem hoist control, multiple stations.

INCHING CIRCUIT
An inching control allows precise settings down to a fraction of an inch each time the push button is pressed. This control is often used for accurate spotting of loads (optional, extra cost)

*** ⚠ WARNING**

Overloading and improper use can result in injury.

To avoid injury:
- Do not exceed working load limit, load rating or capacity.
- Do not use to lift people or loads over people.
- Use only alloy chain and attachments for overhead lifting.
- Read and follow all instructions.

CHESTER HOIST

BULLETIN
ELC-100-05

Chester Electric
Low Headroom Chain Hoists

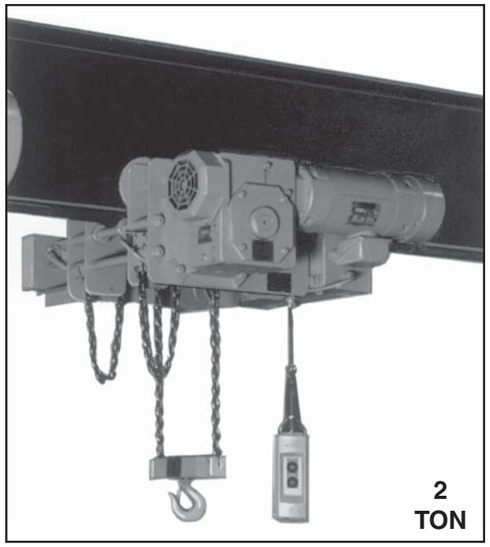

2 TON

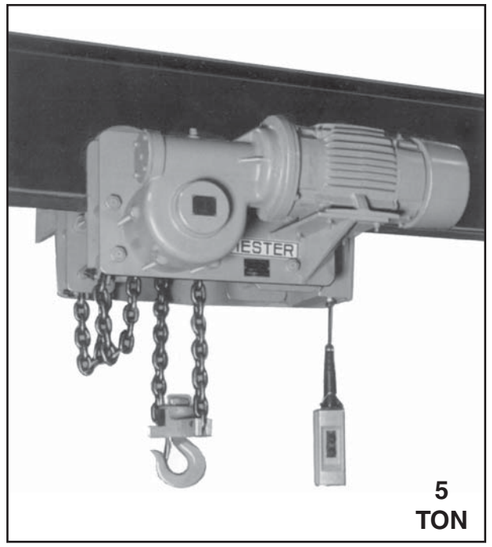

5 TON

We offer a complete line of worm gear driven, electric, low headroom trolley hoists. These hoists are equipped with case hardened load chain and are available in models to lift and move loads from 1 to 24 tons. Choices of plain push/pull, hand-geared or motorized trolley drives are available to meet a variety of applications.

- Manufactured in the U.S.A.
- 5 and 6 pocket load wheels – chain saver feature
- Durable self-locking worm drive transmission requiring little if any maintenance
- Sturdy steel construction
- Direct acting motor brake which sets automatically if power is interrupted
- Two precision bearings per trolley wheel minimizes traversing effort

CHESTER

ELECTRIC LOW HEADROOM CHAIN HOISTS

Chester Electric Low Headroom Chain Hoists are designed for those applications where headroom is limited. Engineered around proven designs, these hoists provide smooth, quiet, trouble-free operation in a variety of Class III hoisting applications. Each unit is built and tested in accordance with the nationally recognized safety standard for overhead hoists ANSI B30.16.

Standard units are furnished with 115 VAC pendant-type two-or four-button weather-resistant control station with push button drop four feet less than lift. Standard controls include, reversing contactors for hoist, control transformer (115 VAC) and terminal block in a NEMA-12 cabinet, supply voltage is 230/460 VAC, 3 phase, 60 Hz and each unit has redundant limit switches for both the upper and lower hook travel.

The Chester Electric Low Headroom Chain Hoist is not adjustable for varying beam sizes. Each unit is custom-built to fit the specific beam specified in the order. Beam size, height, flange width and curve radius are required for all orders.

FOR IMMEDIATE SERVICE – CALL TSOC!

Distributed by Tri-State Equipment Company Inc.
Email: sales@tsoverheadcrane.com
Web: www.tsoverheadcrane.com
PH: 314-869-7200 | FAX: 314-869-7226

Catalog Number			Rated capacity	Standard lift	†† Minimum	Minimum distance bottom of I-beam to	Hoist Speed (FPM)	Motorized Trolley Speed	Motor (H.P.) (RPM)	Net Weight Lbs.		
Plain	Hand Geared	Motorized	in short tons	in feet	radius curve	hook in inches		(FPM)		Plain	Hand Geared	Motorized
ELP-1	ELG-1	ELM-1	1	10	6'6"	7"	10	35	2@1800	440	470	480
ELP-1 1/2	ELG-1 1/2	ELM-1 1/2	1 1/2	10	6'6"	7"	10	35	2@1800	440	470	480
ELP-2	ELG-2	ELM-2	2	10	6'6"	7"	10	35	2@1800	440	470	480
ELP-3	ELG-3	ELM-3	3	10	6'6"	8"	5	35	2@1800	540	570	580
ELP-4	ELG-4	ELM-4	4	10	7'6"	8 1/2"	5	35	2@1800	540	570	580
ELP-5	ELG-5	ELM-5	5	10	8'6"	9 1/2"	7	35	4@1200	1280	1340	1310
ELP-6	ELG-6	ELM-6	6	10	8'6"	9 1/2"	7	35	4@1200	1280	1340	1310
ELP-8	ELG-8	ELM-8	8	10	9'6"	12"	4	20	4@1200	1350	1480	1400
ELP-10	ELG-10	ELM-10	10	10	10'	12 1/2"	3.5	20	4@1200	1730	1810	1780
ELP-12	ELG-12	ELM-12	12	10	†	12 1/2"	3.5	20	4@1200	1730	1810	1780
ELP-16	ELG-16	ELM-16	16	10	†	14 1/2"	2	20	4@1200	2300	2380	2350
ELP-20	ELG-20	ELM-20	20	10	†	18"	1.7	20	4@1200	2650	2810	2750
ELP-24	ELG-24	ELM-24	24	10	†	18"	1.7	20	4@1200	2650	2810	2750

† Straight track operation only recommended for these units. However curve radius must be specified on orders.
†† Curves less than minimum may be fitted by special construction. Consult factory.

ALL HEADROOM DIMENSIONS DETERMINED WHILE HOIST UNDER LOAD

CHESTER

ELECTRIC LOW HEADROOM CHAIN HOISTS

CLEARANCE DIMENSIONS

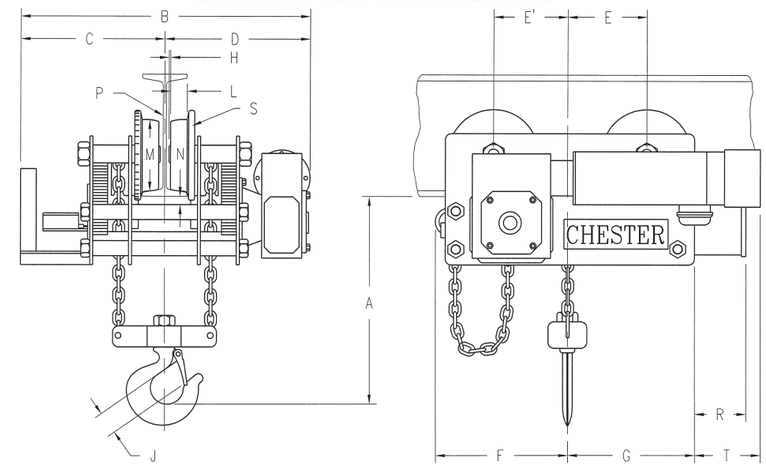

Minimum Radius Curve

CAPACITY	MINIMUM RADIUS CURVE
1 1/2 - 2 Ton	6' 6"
3 - 4 Ton	7' 6"
5 - 6 Ton	8' 6"
8 Ton	9' 6"
10 Ton	10' 0"

For over 10 Ton, straight track operation is recommended.

Curve radius must be specified on orders.

Curves less than minimum radius may be fitted upon application.

PLAIN OR GEARED

Capacity Tons	A	B	C	D	E	E'	F	G	H***
1	7"	33 13/16"	16 1/2"	17 5/16"	7 3/4"	7 3/4"	12"	10"	1/16"
1 1/2	7"	33 13/16"	16 1/2"	17 5/16"	7 3/4"	7 3/4"	12"	10"	1/16"
2	7"	33 13/16"	16 1/2"	17 5/16"	7 3/4"	7 3/4"	12"	10"	1/16"
3	8"	33 13/16"	16 1/2"	17 5/16"	9"	9"	14 3/4"	13"	1/4"
4	8 1/2"	33 13/16"	16 1/2"	17 5/16"	9"	9"	14 3/4"	13"	1/4"
5	9 1/2"	48 13/16"	23 1/2"	25 5/16"	7 3/8"	7 3/8"	13 1/16"	15 1/16"	1/16"
6	9 1/2"	48 13/16"	23 1/2"	25 5/16"	7 3/8"	7 3/8"	13 1/16"	15 1/16"	1/16"
8	12"	48 13/16"	23 1/2"	25 5/16"	8 3/8"	8 7/8"	14"	13 1/2"	3/16"
10	12 1/2"	48 13/16"	23 1/2"	25 5/16"	8 1/2"	9 3/4"	15 5/8"	14 3/8"	3/8"
12	12 1/2"	48 13/16"	23 1/2"	25 5/16"	8 1/2"	9 3/4"	15 5/8"	14 3/8"	3/8"
16	14 1/2"	52 7/8"	25 1/2"	27 3/8"	11 7/8"	11 7/8"	18 5/8"	18 5/8"	7/16"
20	18"	52 7/8"	26 1/2"	27 3/8"	12 1/8"	12 3/8"	19 1/4"	19"	7/16"
24	18"	52 7/8"	26 1/2"	27 3/8"	12 1/8"	12 3/8"	19 1/4"	19"	7/16"

Capacity Tons	J	L	M	N	P*	R	S	T**
1	1 5/32"	1 1/8"	4 1/2"	1/2"	6"I@12.5#	6 1/2"	6"	8 7/8"
1 1/2	1 5/32"	1 1/8"	4 1/2"	1/2"	6"I@12.5#	6 1/2"	6"	8 7/8"
2	1 5/32"	1 1/8"	4 1/2"	1/2"	6"I@12.5#	6 1/2"	6"	8 7/8"
3	1 13/32"	1 11/32"	6 3/8"	5/8"	8"I@18.4#	6 1/2"	8"	4 1/8"
4	1 11/16"	1 11/32"	6 3/8"	5/8"	8"I@18.4#	6 1/2"	8"	4 1/8"
5	1 11/16"	1 13/32"	7 3/16"	5/8"	10"I@25.4#	6 1/2"	9"	10 1/4"
6	1 11/16"	1 13/32"	7 3/16"	5/8"	10"I@25.4#	6 1/2"	9"	10 1/4"
8	2 7/32"	1 11/16"	8 1/4"	9/16"	10"I@25.4#	6 1/2"	10"	10 1/2"
10	2 1/4"	1 3/4"	9 3/4"	3/4"	12"I@31.8#	6 1/2"	11 11/16"	8 3/8"
12	2 1/4"	1 3/4"	9 3/4"	3/4"	12"I@31.8#	6 1/2"	11 11/16"	8 3/8"
16	3"	2"	11 3/4"	3/4"	15"I@42.9#	6 1/2"	13 1/2"	1 3/4"
20	3 5/8"	2"	11 3/4"	3/4"	18"I@54.7#	6 1/2"	13 1/2"	7/8"
24	3 5/8"	2"	11 3/4"	3/4"	18"I@54.7#	6 1/2"	13 1/2"	7/8"

All Dimensions are in inches.
P* – Min. Std. I-beam for Proper Wheel Running Clearance Only. Customer must verify their beam is adequate for the applied Loading. H*** – From the Face of Wheel to the End of the Axle.
T** – For Std. Motor and Brake Only. Hoists are designed for H-3 duty.