Valustar electric chain hoist

Designed specifically for general commercial applications. This compact, lightweight hoist features:

- Fully machined and heat treated liftwheel with hardened chain guides for smooth chain operation and reduced chain wear
- Standard lift 10, 15 & 20 ft.
- 5 ft. power cord length
- Heavy-duty caliper type AC brake
- Rugged NEMA 4 control station, 115 volt control circuit
- Easy to install and maintain
- Hoistaloy load chain for smooth operation and maximum chain life
- Efficient regenerative braking system to avoid heat generation in power train
- Enclosed hoist duty motor
- Gear train lifetime lubricated with non-oxidizing grease
- Latch type hooks
- Hook suspension standard
- Fully machined and heat treated gear train
- Standard overload Protector device
- H3 duty-1 phase; H-4 duty-3 phase
- Lifetime warranty
- Metric rated
- Made in U.S.A.

Specifications

	Product code						Approximate shipping wt. (lbs.)	
	115-1-60	230/460 3-60	Model	Max. capacity tons	Hoist lifting speed FPM	Reeving	115-1-60	230/460 3-60
Single speed 10' lift	2401	2402	WB	1/4	16	single	54	58
	2403	2404	WF	1/2	16	single	60	58
	2405	2406	WH	1	8	double	70	68
	2407	2408	WL	1	16	single	105	106
	2409	2410	WR	2	8	double	130	122
Single speed 15' lift	2401B	2402B	WB	1/4	16	single	64	62
	2403B	2404B	WF	1/2	16	single	64	62
	2405B	2406B	WH	1	8	double	77	75
	2407B	2408B	WL	1	16	single	111	112
	2409B	2410B	WR	2	8	double	136	128
Single speed 20' lift	2401C	2402C	WB	1/4	16	single	68	66
	2403C	2404C	WF	1/2	16	single	68	66
	2405C	2406C	WH	1	8	double	84	82
	2407C	2408C	WL	1	16	single	116	117
	2409C	2410C	WR	2	8	double	150	142

Longer lifts and modifications available. Apply for details.

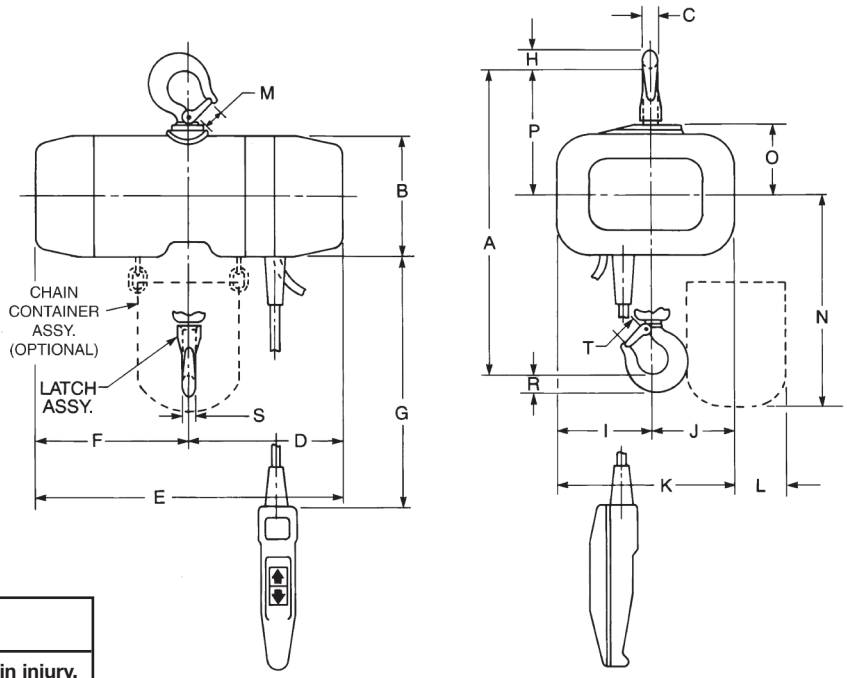

*⚠WARNING

Overloading and improper use can result in injury.

To avoid injury:
- Do not exceed working load limit, load rating capacity
- Do not use to lift people or loads over people.
- use only alloy chain for overhead lifting.
- Read and follow all instructions.

Clearance dimensions (in.)

Rated capacity* (tons)

	1/4	1/2	1/2	1	1/2	1	2
Dimension	Model WB	Model WF	Model WE	Model WH	Model WJ	Model WL	Model WR
A	14 1/4	14 1/4	17 7/8	17 7/8	15 9/16	15 9/16	22 1/2
B	6 1/8	6 1/8	6 1/8	6 1/8	7 5/8	7 5/8	7 5/8
C	11/16	11/16	7/8	7/8	7/8	7/8	1 1/8
D	8	8	8	8	9	9	9
E	16 1/16	16 1/16	16 1/16	16 1/16	20 3/16	20 3/16	20 3/16
F	8 1/16	8 1/16	8 1/16	8 1/16	11 3/16	11 3/16	11 3/16
G**	6'-3"	6'-3"	6'-3"	6'-3"	6'-3"	6'-3"	6'-3"
H	1	1	1 3/16	1 3/16	1 3/16	1 3/16	1 1/2
I	4 13/16	4 13/16	3 7/8	3 7/8	7 1/4	7 1/4	6 3/16
J	3 15/16	3 15/16	4 7/8	4 7/8	5 7/16	5 7/16	6 1/2
K	8 3/4	8 3/4	8 3/4	8 3/4	12 11/16	12 11/16	12 11/16
L	1 11/16	1 11/16	1 11/16	1 11/16	7/16	7/16	7/16
M	1	1	1 1/8	1 1/8	1 1/8	1 1/8	1 5/16
N**	12 15/16	12 15/16	15 15/16	15 15/16	16 11/16	16 11/16	22 11/16
O	3 9/16	3 9/16	3 9/16	3 9/16	4	4	4
P	6 3/16	6 3/16	6 1/2	6 1/2	6 7/8	6 7/8	7 3/8
R	1	1	1 3/16	1 3/16	1 3/16	1 3/16	1 1/2
S	11/16	11/16	7/8	7/8	7/8	7/8	1 1/8
T	1	1	1 1/8	1 1/8	1 1/8	1 1/8	1 5/16

** Based on 10 foot lift units