Product Information

Air Chain Hoist

MLK Series

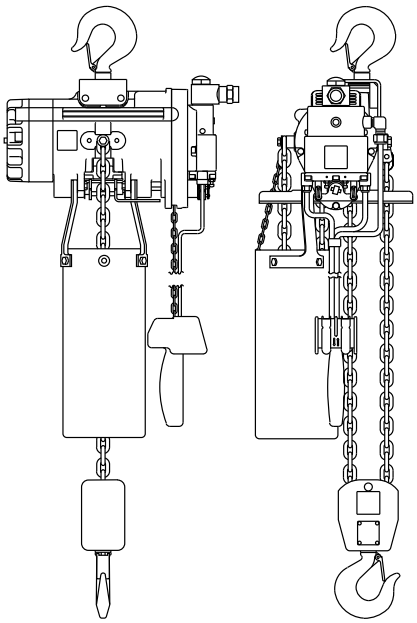

(Dwg. MHP0456)

Save These Instructions

Ingersoll Rand®

Form 47112677
Edition 2
January 2014

Only allow **Ingersoll Rand** trained technicians to perform maintenance on this product. For additional information contact **Ingersoll Rand** factory or nearest Distributor.

For additional supporting documentation refer to Table 1 'Product Information Manuals' on page 2.

The use of other than genuine **Ingersoll Rand** replacement parts may result in safety hazards, decreased performance and increased maintenance and will invalidate all warranties.

Original instructions are in English. Other languages are a translation of the original instructions.

Refer all communications to the nearest **Ingersoll Rand** Office or Distributor.

Table 1: Product Information Manuals

Publication	Part/Document Number	Publication	Part/Document Number
Product Safety Information Manual	MHD56295	Product Maintenance Information Manual	47099007
Product Parts Information Manual	47112669		

PRODUCT DESCRIPTION

MLK Series Chain hoists are powered by compressed air and are designed to lift and lower loads. They are operated through manual Pull-Chain or Lever-Actuated pendant control. MLK Series chain hoists utilize a rotary vane air motor to drive a chain wheel, that lifts and lowers the load. Epicyclic gearing is employed to reduce the motor speed and multiply the torque. Each hoist is equipped with a spring operated, Air-Release disc brake to hold a suspended load. The hoist can be bolted or hook mounted to a trolley or permanent mounting structure.

The MLK Series hoists are suitable for A5 (ASME HST-5), severe duty use in the 0.25 to 1 metric ton range. The MLK series is designed to be used as a high speed production hoist. The MLKS is designed with reduced chain speed for optimal control . MLKR Spark-Resistant hoists are equipped with stainless steel chain, and or bronze hooks, for maximum protection.

Table 2: MODEL CODE

Example: M L 500K S 2 C 10 - C 6 U

Series:

M

Link Chain Type:

L

Hoist Capacity:

250K = 250 kg - 1/4 metric ton (550 lb)
500K = 500 kg - 1/2 metric ton (1100 lb)
1000K = 1000 kg - 1 metric ton (2200 lb)

Base Model Option †:

R = Spark Resistant (ML250K and ML500K Only)
S = Slow Speed Spotting

Control:

0 = No Controls
1 = Pull Chain
2 = Pendant
3 = 2 Motor Pendant
4 = 3 Motor Pendant

Upper Suspension:

A = Lug Adapter
B = Bullard Hook (Self Closing)
C = Steel Snap Hook
R = Bronze Snap Hook
DA = Plain Rigid Trolley (Universal wheels "A" flange)
DD = Plain Rigid Trolley (Universal wheels "D" flange)
FXXA = Hand Chain (XX-Drop)
FXXD = Hand Chain (XX-Drop)
HA = Powered Trolley (Universal wheels "A" flange)
HD = Powered Trolley (Universal wheels "D" flange)

Length of Lift (Feet):

10 = 10 ft (3 m) Standard
XX = Specify Length

Lower Suspension:

B = Bullard Hook
C = Steel Snap Hook
R = Bronze Snap Hook

Control Drop (Feet):

6 = 6 ft (1.8 m) Standard
XX = Specify Length

Option:

E = Epoxy Coating
M = Manual Brake Release
P = Piped Away Exhaust
S = Steel Chain Container
U = Fabric Chain Container

Note:

1. Pull chain length available – 0 ft to 125 ft max.
2. Pendant control length available – 0 ft to 75 ft max.
3. Maximum available lifts :

ML250K, ML250KS	100 ft
ML250KR	200 ft
ML500K, ML500KR, ML500KS	200 ft
ML1000K, ML1000KS	200 ft

Table 3:

Hoist Model No.	Rated Capacity (kg)	No. Chain Falls	Speed with Rated Load				Speed with Half Load				Speed with No Load			
			fpm		m/m		fpm		m/m		fpm		m/m	
			up	down	up	down	up	down	up	down	up	down	up	down
ML250KS	250	1	40	90	12.2	27.4	53	71	16.1	21.6	71	53	21.6	16.1
ML250K			101	117	30.8	35.7	145	111	44.2	33.8	171	99	52.1	30.1
ML250KR			26	38	7.9	11.6	34	36	10.4	11	42	30	12.8	9.1
ML500KS	500	1	22	66	6.7	20.1	30	44	9.1	13.4	44	32	13.4	9.7
ML500K			55	97	16.8	29.6	80	72	24.4	22	106	59	32.3	18.0
ML500KR		2	13	20	4.0	6.1	17	18	5.2	5.5	21	15	6.4	4.6
ML1000KS	1000	2	11	33	3.4	10	15	22	4.6	6.7	22	16	6.7	4.9
ML1000K			28	49	8.5	14.9	40	36	12.2	11	53	30	16.1	9.1

Note:
Performance figures based on 70 SCFM (45 SCFM for MLKS and MLKR Hoists) at 90 psig (630 kPa) air supply at hoist inlet.
Pendant control models use approximately 4 SCFM more air.

INSTALLATION

Prior to installing the hoist, carefully inspect it for possible shipping damage. Hoists are supplied fully lubricated from the factory. Lubrication of the load chain is recommended before initial hoist operation.

WARNING

- **A falling load can cause injury or death. Before installing, read "Product Safety Information Manual".**
- **The supporting structures and load-attaching devices used in conjunction with this hoist must provide adequate support to handle all hoist operations plus the weight of the hoist and attached equipment. This is the customer's responsibility. If in doubt, consult a registered structural engineer.**

CAUTION

- **Owners and users are advised to examine specific, local or other regulations, including American Society of Mechanical Engineers and/or OSHA Regulations which may apply to a particular type of use of this product before installing or putting hoist to use.**

Hoist

Make certain your hoist is properly installed. A little extra time and effort in so doing can contribute a lot toward preventing accidents and helping you get the best service possible.

Always make certain the supporting member from which the hoist is suspended is strong enough to support the weight of the hoist plus the weight of a maximum rated load plus a generous factor of at least 500% of the combined weights.

If the hoist is suspended by a top hook, the supporting member should rest completely within the saddle of the hook and be centered directly above the hook shank. Do not use a supporting member that tilts the hoist to one side or the other.

Hook Mounted Hoist Installation

Place hook over mounting structure. Make sure hook latch is engaged.

Trolley Mounted Hoist Installation

When installing a trolley on a beam, measure the beam flange and temporarily install the trolley on the hoist to determine the exact distribution and arrangement of the spacers. The distance between the wheel flanges should be 3/16 in. to 1/4 in. (4.76 mm to 6.35 mm) greater than the width of the beam flange. The number of spacers (257) between the trolley side plate (250) and the mounting lug on the hoist must be the same in all four locations in order to keep the hoist centered under the I-beam. The remaining spacers must be equally distributed on the outside of the side plates. (For additional information refer to Installation and Maintenance Manual Form P6609 for Vane Motor Driven Trolleys.)

Refer to Dwg. MHP0866 on page 7, **A.** Minimum of one spacer required;
Note: Ensure X-Y=3/16 to 1/4 in. (5 to 6 mm)

WARNING

- **At least one Mounting Spacer (257) must he used between the head of each Trolley Bracket Bolt (255) and the Trolley Bracket (250) and between each Trolley Bolt Nut (256) and the Trolley Bracket. Failure to do this could cause the hoist to fall when used improperly.**

Torque the Trolley Bolt Nuts (256) to 150 ft-lb (203 Nm).

When installing the hoist and trolley on the beam, make certain the side plates are parallel and vertical. After installation, operate the trolley over the entire length of the beam with a capacity load suspended 4 to 6 inches (10 to 15 cms) off the floor.

CAUTION

- **To avoid an unbalanced load which may damage the trolley, the hoist must be centered under the trolley.**

NOTICE

- **Trolley wheels ride on the top of the lower flange of the beam.**

Chain Container

When installing a fabric chain container on an MLK hoist, refer to drawings MHP3236 and MHP3237 in the Product parts information manual.

NOTICE

- **Make certain to adjust the balance chain so that the chain container does not contact the load chain.**
- **Allow chain to pile naturally in the chain container. Piling the chain carelessly into the container by hand may lead to kinking or twisting that will jam the hoist.**

1. Check the chain container size to make sure the length of load chain is within the capacity of the chain container. Replace with a larger chain container, if required.
2. Attach the chain container to the hoist.
3. Run bottom block to lowest point and run hoist in up direction to feed the chain back into the container.

Air System

The supply air must be clean, lubricated and free from water or moisture. A minimum of 90 psig (6.3 bar/630 Kpa) at the hoist motor is required to provide rated hoist capacity.

Refer to Dwg. MHP0191 on page 7, **A.** Air Out; **B.** Lubricator; **C.** Regulator; **D.** Air In; **E.** Filter.

Air Lines

The inside diameter of the hoist air supply lines must not be smaller than 1/2 in. (13 mm) based on a maximum of 50 ft (15 m) between the air supply and the hoist. Contact the factory for recommended air line sizes for distances greater than 50 ft (15 m). Before making final connections, all air supply lines should be purged before connecting to unit inlet. Supply lines should be as short and straight as installation conditions will permit. Long transmission lines and excessive use of fittings, elbows, tees, globe valves etc. cause a reduction in pressure due to restrictions and surface friction in the lines. If quick-disconnect fittings are used at the inlet of the hoist, they must have at least a 3/8 in. (9.5 mm) air passage. Use of smaller fittings will reduce performance.

NOTICE

- **Always use an air line filter and lubricator.**

Air Line Lubricator

Always use an air line lubricator with these hoists. Use a lubricator having an inlet and outlet at least as large as the inlet on the hoist motor. Install the air line lubricator as close to the air inlet on the hoist motor as possible. Refer to "ACCESSORIES" in the Product parts information manual.

CAUTION

- **Shut off air supply before filling air line lubricator.**
- **Lubricator must be located no more than 10 ft (3 m) from the motor.**
- **The air line lubricator should be replenished daily and set to provide lubrication at a minimum rate of 1 to 3 drops per minute, and adjusted at maximum hoist speed. Use of SAE 10W oil or a good grade of hydraulic oil is recommended. A fine mist will be exhausted from the throttle control valve when the air line lubricator is functioning properly.**
- **Do not use automotive type detergent oil. Detergents will delaminate the motor vanes and cause premature failure.**

Air Line Filter

It is recommended that an air line strainer/filter be installed as close as practical to the motor air inlet port to prevent dirt from entering the motor. The strainer/filter should provide 10 micron filtration and include a moisture trap. Clean the strainer/filter monthly to maintain its operating efficiency.

Moisture in Air Lines

Moisture that reaches the air motor through the supply lines is a primary factor in determining the length of time between service overhauls. Moisture traps can help to eliminate moisture. Other methods, such as an air receiver which collects moisture before it reaches the motor or an aftercooler at the compressor that cools the air prior to distribution through the supply lines, are also helpful.

The inlet strainer (42) must be installed on the hoist. Failure to do so may result in a hoist malfunction. The bleed adjustment screws (35 or 336) used on hoists with a pendent control are factory adjusted to provide optimum control at 90 psig (6.3 bar/630 kPa) air pressure. If the hoist is used with other air supply pressures, the bleed adjustment screws may require readjustment.

Adjustment of Bleed Screws on Pendent Control Models

For maximum performance and control, adjust the bleed screws (35 or 336) as follows:

1. Loosen the adjustment screw locknut (36 or 337).
2. Back out the adjustment screw (35 or 336) approximately one third (1/3) of a turn.
3. While fully depressing the pendent throttle lever (205) and holding it in that position, turn in the adjustment screw until the piston rod fully retracts. This adjustment will provide a good balance of spotting control and maximum hoist speed. If better spotting control is desired, slowly back out the adjustment screw a little at a time until the spotting control is suitable.
4. Tighten the adjustment screw locknut (36 or 337).

Storing the Hoist

1. Always store the hoist in a no load condition.
2. Wipe off all dirt and water.
3. Oil the chain, hook pins and hook latch.
4. Place in a dry location.
5. Plug hoist air inlet port.
6. Before returning hoist to service, follow instructions for 'Hoists Not In Regular Use'. Refer to the "INSPECTION" section on page 5.

OPERATION

The four most important aspects of hoist operation are:

1. Follow all safety instructions when operating hoist.
2. Allow only people trained in safety and operation on this product to operate hoist.
3. Subject each hoist to a regular inspection and maintenance program.
4. Be aware of hoist capacity and weight of load at all times. Ensure load does not exceed hoist or rigging ratings.

Operators must be physically competent. Operators must have no health condition which might affect their ability to act, and they must have good hearing, vision and depth perception. The hoist operator must be carefully instructed in his duties and must understand the operation of the hoist, including a study of the manufacturer's literature. The operator must thoroughly understand proper methods of hitching loads and should have a good attitude regarding safety. It is the operator's responsibility to refuse to operate the hoist under unsafe conditions.

Initial Operating Checks

Hoists are tested for proper operation prior to leaving the factory. Before the hoist is placed into service the following initial operating checks should be performed.

1. After installation of trolley mounted hoists, check to ensure the hoist is centered below the trolley.
2. Check for air leaks in the supply hose and fittings to pendant, and from pendant to manifold.
3. When first running the hoist or trolley motors some light oil should be injected into the inlet connection to allow good lubrication.
4. When first operating the hoist and trolley it is recommended that the motors be driven slowly in both directions for a few minutes.
5. Operate the trolley along the entire length of the beam.
6. Inspect hoist and trolley performance when raising, moving and lowering test load(s). Hoist and trolley must operate smoothly and at rated specifications prior to being placed in service.
7. Check that trolley (if equipped) and hook movement is the same direction as arrows or information on the pendant control.
8. Raise and lower a light load to check operation of the hoist brake.
9. Check hoist operation by raising and lowering a load equal to the rated capacity of the hoist a few inches (cm) off the floor.
10. Check operation of limit devices.
11. Check to see that the hoist is directly over the load. Do not lift the load at an angle (side pull or " yard ").
12. Check to see that the hoist is securely connected to the overhead crane, monorail, trolley or supporting member.
13. Check to see that the load is securely inserted in the hook, and that the hook latch is engaged.

WARNING

- **Only allow personnel trained in safety and operation of this product to operate the hoist and trolley.**
- **This Hoist is not designed or suitable for lifting, lowering or moving persons. Never lift loads over people.**

Hoist Controls

Two Lever Pendant

Refer to Dwg. MHP0427 on page 7, **A.** Lower Load; **B.** Raise Load;

A two lever pendant provides operation of the hoist. For units with powered trolleys a four lever pendant is required.

WARNING

- **The hook latch is intended to retain loose slings or devices under slack conditions. Hook latches are not intended to be an anti-fouling device, so caution must be used to prevent the latch from supporting any of the load.**

Refer to Form P6778 for information on Pendant Throttle Handle Assemblies for two and three motor functions.

INSPECTION

There are two types of inspection, the frequent inspection performed by the operator and periodic inspections performed by personnel trained in the operation and repair of this hoist.

Careful inspection on a regular basis will reveal potentially dangerous conditions while still in the early stages, allowing corrective actions to be taken before the condition becomes dangerous.

Any deficiency revealed through inspection must be reported to an appointed person. A determination must be made as to whether a deficiency constitutes a safety hazard before resuming operation of the hoist.

Frequent Inspection

On hoists in continuous service, frequent inspection should be made at the beginning of each shift. In addition, visual inspections should be conducted during regular service for any damage or evidence of malfunction.

1. **Operation.** Check for visual signs or abnormal noises (grinding etc.) which could indicate a potential problem. Make sure all controls function properly and return to neutral when released. Check chain feed through the hoist and bottom block. If chain binds, jumps, is excessively noisy or "clicks", clean and lubricate the chain. If problem persists, replace the chain. Do not operate the hoist until all problems have been corrected.
2. **Hooks.** Check for wear or damage, increased throat width, bent shank or twisting of the hook. Check hooks swivel freely. Replace hooks which exceed the throat opening. Refer to Dwg. MHP0040 on page 7, **A.** Throat Width. Replace hooks which exceed a 10° twist. Refer to Dwg. MHP0111 on page 7, **A.** Twisted DO NOT USE; **B.** Normal Can Be Used. Refer to the latest edition of ASME B30.10 'HOOKS' for additional information. Refer to Product Maintenance Information Manual.

Table 4:

Hoist Model	Throat Opening			
	New Hook		Discard Hook	
	in.	mm	in.	mm
MLK250K, ML250KS, ML500K and ML500KS	1-1/16	27	1-5/32	29
ML1000K and ML1000KS	1-1/4	31.8	1-11/32	34.1
ML250KR and ML500KR	1-7/32	31.0	1-5/16	33.4

3. **Hook Latch.** Make sure the hook latch is present and operating. If hook latch snaps past tip of hook, the hook is sprung and must be replaced. Replace if necessary.

CAUTION

- **Do not use hoist if hook latch is missing or damaged.**

4. **Upper and Lower Limit Device.** Test operation with no load slowly to both extremes of travel. Upward travel must stop when the bottom block or stop buffer on chain hits hoist limit arm. Downward travel must stop when the loop at the unloaded end of the chain decreases and activates the limit arm.
5. **Limit Assembly.** Check limit arm moves freely.
6. **Air System.**. Visually inspect all connections, fittings, hoses and components for indication of air leaks. Repair any leaks found. Check and clean the filter in the Inlet Nipple, if equipped, and the strainer in the Inlet Strainer (42).
7. **Controls.** During operation of hoist, verify response to pendant is quick and smooth. See that the controls return to neutral when released. If hoist responds slowly or movement is unsatisfactory, do not operate hoist until all deficiencies have been corrected.
8. **Load Chain.** Examine each of the links for bending, cracks in weld areas or shoulders, traverse nicks and gouges, weld splatter, corrosion pits, striation (minute parallel lines) and chain wear, including bearing surfaces between chain links Dwg. MHP0102 on page 7 , **A.** Diameter; **B.** Welded Area; **C.** Visually inspect as much of the chain as is possible. Inspect for wear, damage and corrosion. If damage is evident, do not operate hoist until the damage has been reviewed and inspected further by an **Ingersoll Rand** trained inspector. Refer to Product Maintenance Information Manual.

NOTICE

- **The full extent of chain wear cannot be determined by visual inspection. At any indication of wear inspect chain in accordance with instructions in the "Periodic Inspection". Refer to Product Maintenance Information Manual.**

9. **Load Chain Reeving.** Ensure welds on standing links are away from the powered chain wheel. Reinstall chain if necessary. Make sure chain is not capsized, twisted or kinked. Adjust as required.
10. **Chain Container.** Check for damage or excessive wear and that chain container is securely attached to the hoist. Secure or replace if necessary.
11. **Labels and Tags.** Check for present and legibility of labels. Refer to Product Parts information manual for correct labels and placement. Replace if damaged or missing.

Hoists Not in Regular Use

1. Equipment which has been idle for a period of one month or more, but less than six months, shall be given an inspection conforming to the requirements of "Frequent Inspection" section on page 5 before being placed in service.
2. Equipment which has been idle for a period of over six months shall be given a complete inspection conforming with requirements of 'Periodic Inspection' before being placed in service. Refer to Product Maintenance Information Manual.
3. Standby equipment shall be inspected at least semiannually in accordance with requirements of 'Frequent Inspection'.

LUBRICATION

The lubrication intervals recommended in this manual are based on intermittent operation of the hoist eight hours each day, five days per week. If the hoist is operated almost continuously or more than the eight hours each day, more frequent lubrication will be required. Also, the lubricant types and change intervals are based on operation in an environment relatively free of dust, moisture, and corrosive fumes. Use only those lubricants recommended. Other lubricants may affect the performance of the hoist. Approval for the use of other lubricants must be obtained from your **Ingersoll Rand** Technical Support Department or distributor. Failure to observe this precaution may result in damage to the hoist and/or its associated components.

Whenever a Series MLK Hoist is disassembled for overhaul or replacement of parts, lubricate as follows:

1. Coat all motor parts with a light film of **Ingersoll Rand** Pneu-Lube ® Medium Oil No. 50 or a good quality hydraulic oil before assembling.

CAUTION

- **Do not use automotive type detergent oil. Detergents will delaminate the motor vanes and cause premature failure.**

2. Apply a coating of **Ingersoll Rand** No. 11 Grease to the Planet Gear Bearings (83), the Brake Driver Bearing (87), and gearing before assembly.
3. The top and bottom hooks are supported by thrust bearings. These bearings must be packed with **Ingersoll Rand** No. 68 grease or a standard No. 2 multi-purpose grease at regular intervals. Neglect of proper lubrication will lead to bearing failure.

Load Chain

WARNING

- **Failure to maintain clean and well lubricated load chain will result in rapid load chain wear that can lead to chain failure which can cause severe injury, death or substantial property damage.**

1. Lubricate load chain weekly, or more frequently, depending on severity of service.
2. In a corrosive environment, lubricate more frequently than normal.
3. Lubricate each link of the load chain and apply new lubricant over existing layer.
4. If required, clean chain with acid free solvent to remove rust or abrasive dust buildup and lubricate the chain.
5. Use **Ingersoll Rand** LUBRI-LINK ® or a SAE 50 to 90 EP oil.

Hook Assemblies

1. Lubricate the hook and hook latch pivot points. Hook and latch should swivel / pivot freely.

2. Use **Ingersoll Rand** LUBRI-LINK® or a SAE 50 to 90 EP oil.

Trolley (if equipped)

Periodically, grease the wheel bearings with **Ingersoll Rand** No. 68 grease or a standard No.2 multi-purpose grease. A grease fitting is provided on the end of each wheel axle.

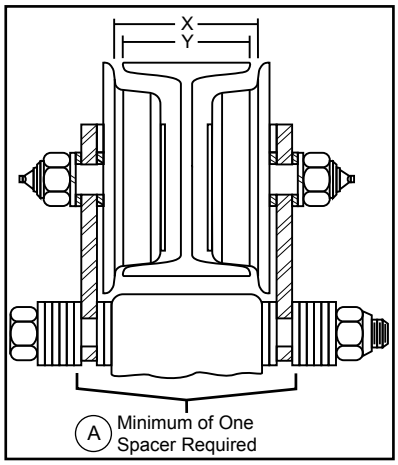

(Dwg. MHP0866)

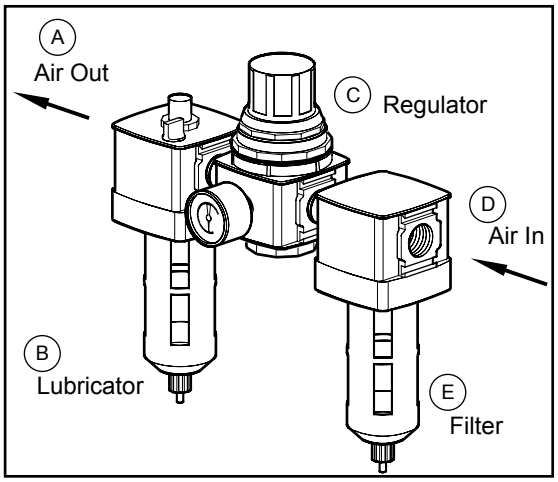

(Dwg. MHP0191)

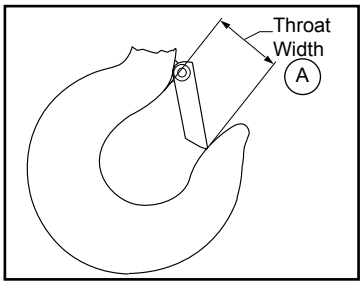

(Dwg. MHP0040)

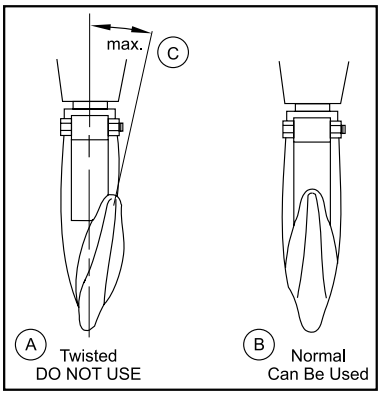

(Dwg. MHP0111)

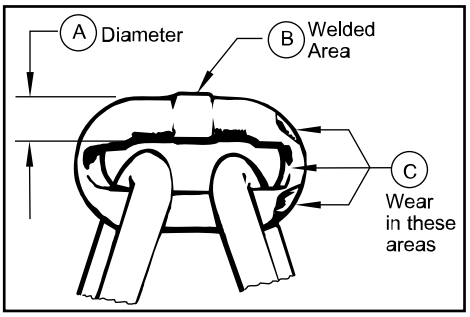

(Dwg. MHP0102)

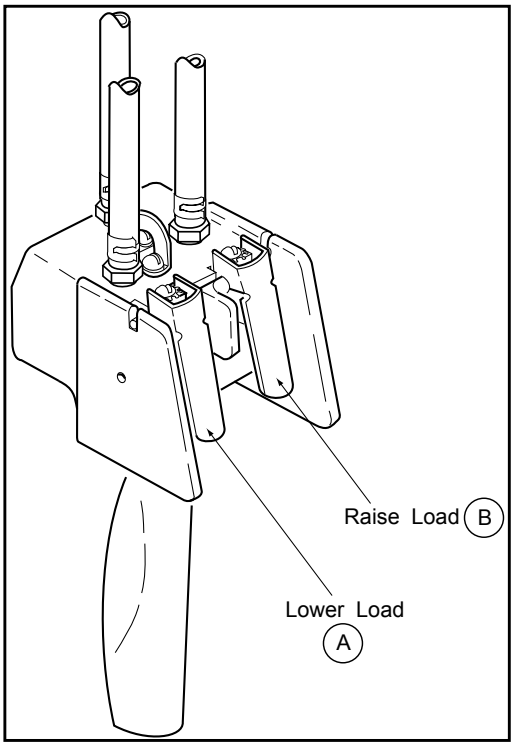

(Dwg. MHP0427)

Distributed by Tri-State Equipment Company Inc.
sales@tsoverheadcrane.com
www.tsoverheadcrane.com
Tel: (314) 869-7200

Ingersoll Rand®

Product Maintenance Information

Air Chain Hoist

MLK Series

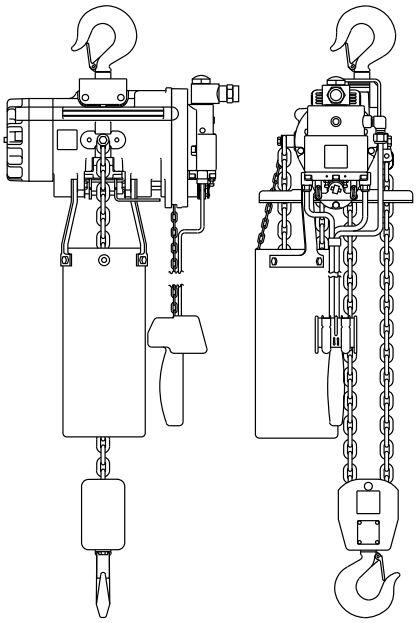

(Dwg. MHP0456)

Save These Instructions

Ingersoll Rand®

Form 47099007
Edition 3
January 2014

Only allow **Ingersoll Rand** trained technicians to perform maintenance on this product. For additional information contact **Ingersoll Rand** factory or nearest Distributor.

For additional supporting documentation refer to Table 1 'Product Information Manuals' on page 2.

The use of other than genuine **Ingersoll Rand** replacement parts may result in safety hazards, decreased performance and increased maintenance and will invalidate all warranties.

Original instructions are in English. Other languages are a translation of the original instructions.

Refer all communications to the nearest **Ingersoll Rand** Office or Distributor.

Table 1: Product Information Manuals

Publication	Part/Document Number	Publication	Part/Document Number
Product Safety Information Manual	MHD56295	Product Information Manual	47112677
Product Parts Information Manual	47112669		

OPERATIONAL CONDITIONS, INSPECTION AND REPAIRS

State of Loading

When considering maintenance intervals and operational life it is necessary to consider the conditions of service to which the hoist is subjected. The following factors influence mechanical performance of the hoist, and should be considered in the course of determining service intervals and product life-cycle. These include:

- Operational Time: Actual running time (determine by when the chain is actually in motion) of hoist per hour or per work period.

- Load Distribution: Actual distribution or proportion of full or partial loads to be handled by equipment.

- Work Distribution: Work may be concentrated during a short span, or uniformly distributed over a work period. Work distribution is not a principle factor when determining mechanical wear, but needs to be considered when calculating operational time and periodic maintenance.

- Environmental Conditions: When protected from weathering, the hoist is suitable for permanent installation in outdoor locations, although maintenance may be increased. The MLK series hoist is not designed for permanent installation in outdoor marine environments.

Load Factor

Some hoist installations, such as assembly line operation, lifted load is repetitive and easily recorded. Other the load is random and not easily characterized. The Mean Effective Load Factor, also referred to as the Load Spectrum, refers to a theoretical single load value that has the same effect on the hoist as various loads lifted by the hoist during a specified time period. The mean effective load factor, LF, can be expressed as:

Where:

$$LF = \sqrt[3]{W_1^3 P_1 + W_2^3 P_2 + W_2^3 P_3 \ldots + W_n^3 P_n}$$

LF = Mean Effective Load Factor (Load Spectrum): Mean effective load factor is the ratio of mean effective load to rated load.

W = Load Magnitude: Load Magnitude is the ratio of the hoist operating load to the hoist rated capacity. No load operation must be included in this calculation. It is also necessary to take into account the weight of any dead load used to facilitate rigging the load to the hoist hook.

P = Load Probability: Load probability is the ration of running time under each load magnitude to the total hoist running time. The sum of all of load probabilities used in the above equation must equal 1.0

NOTICE

- **Randomly distributed loads - A unit subjected to a random distribution of loading will be assumed to lift load distributed evenly within the rated load of the hoist in decreasing step of 20% of the previous load value. For the purposes of maintenance, such units should be assumed to have a mean effective load factor of 0.65.**

Periodic Inspection

Refer to Table 2 'Inspection Classifications' on page 2 for suggested inspection classifications for Periodic Inspection Intervals. Select conditions most appropriate to application.

Table 2: Inspection Classifications

Conditions	Usage	Load Characterization
Normal	< = 25% duty cycle	Regular
Heavy	> 25% duty cycle	Usually medium loads, frequent max. loads
Severe	Loads normally less than 50% of rated load with running time up to continuous; or, Loads normally above 50% of rated load with running time up to 50% of work period.	

Maintain written records of periodic inspections to provide an accumulative basis for continuing evaluation. Inspect all items listed in 'Frequent Inspection' in the Product Information Manual. Also inspect the following at the suggested intervals recommended in Table 5 "Periodic Maintenance/Inspection Interval"Table 6 'Periodic Maintenance/Inspection Interval' on page 3 .

According to ASME B30.16, frequency of periodic inspection depends on the severity of usage:

Table 3:

NORMAL	HEAVY	SEVERE
Yearly	Semi-Annually	Quarterly

Disassembly may be required for HEAVY or SEVERE usage.

Inspect all the items in "Frequent Inspection" given in the Product Information Manual. Also inspect the following:

1. **FASTENERS.** Check all rivets, split pins, capscrews and nuts. Replace if missing or tighten if loose.
2. **ALL COMPONENTS.** Inspect for wear, damage, distortion, deformation and cleanliness. If external evidence indicates the need, disassemble. Check gears, shafts, bearings, sheaves, chain guides, springs and covers. Replace worn or damaged parts. Clean, lubricate and reassemble.
3. **HOOKS**. Inspect hooks carefully for cracks using magnetic particle or other suitable non-destructive method. Inspect hook retaining parts. Tighten or repair, if necessary.
4. **LOAD CHAIN WHEEL.** Check for damage or excessive wear. Replace if necessary. Observe the action of the load chain feeding through the hoist. Do not operate a hoist unless the load chain feeds through the hoist and hook block smoothly and without audible clicking or other evidence of binding or malfunctioning.
5. **MOTOR.** If performance is poor, disassemble the motor and check for wear or damage to bearings and shafts. The parts should be cleaned, lubricated and reassembled. Replace worn or damaged parts.
6. **BRAKE.** Raise a load equal to the rated capacity of the hoist a few inches (cms) off the floor. Verify hoist holds the load without drift. If drift occurs, disassemble. Remove brake discs as described in the "MAINTENANCE" section. Check and clean the brake parts each time the hoist is disassembled. Replace the brake discs if the thickness is less than 0.090 in. (2.29 mm).
7. **SUPPORTING STRUCTURE.** Check for distortion, wear and continued ability to support load.
8. **TROLLEY.** (if equipped) Check that the trolley wheels track the beam properly and clearance between side rollers and beam is correct, 1/16 to 3/16 in. (1.6 to 4.7mm). Check that wheels and rail are not excessively worn and inspect side plates for spreading due to bending. Do not operate the hoist until the problem has been determined and corrected.
9. **LABELS AND TAGS.** Check for presence and legibility. Replace if necessary.
10. **LOAD CHAIN END ANCHORS.** Ensure both ends of load chain are securely attached. Secure if loose, repair if damaged, replace if missing. Check chain stopper is correctly installed and functional.
11. **LOAD CHAIN.** Measure the chain for stretching by suspending a 50 to 100 lbs. (23 to 45 kg) load from the hoist. Measure the load chain over the outside of seven link sections all along the chain paying particular attention to the most frequently reeved links. When any seven links in the working length reaches or exceeds the discard length shown in Table 4 'Load Chain Normal and Discard Length' on page 2, replace the entire chain. Refer to Dwg. MHP0455 on page 3. Always use a genuine Ingersoll Rand replacement chain.

Table 4: Load Chain Normal and Discard Length

Dimensions Of Link - Inches				Number of Links	Discard Length Over N Links, inches
Nominal Wire Diameter	Pitch	Inside Width	Outside width		
1/4	0.767	0.298	0.823	7	5.98

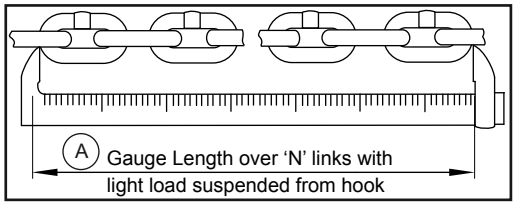

(Dwg. MHP0455)

■ Records and Reports

Inspection records, listing all points requiring periodic inspection should be maintained for all load bearing equipment. Written reports based on severity of service, should be made of the condition of critical parts as a method of documenting periodic inspection. These reports should be dated, signed by the person who performed the inspection, and kept on file where they are readily available for review.

■ Maintenance Schedule

After considering the previous section, regarding loading, it is possible to determine the necessary maintenance intervals. Given that the load spectrum has been determined and the duration of use has been recorded, the following chart is intended to be used to determine service intervals for major overhauls and unit gear box lubrication. Accordingly, the following table is given:

Table 5: Service intervals for major overhauls

Load Spectrum (LF)	Characterization	Time Before Overhaul (hours)	Gear Box Grease Change (*) (hours)
L1 - Light 0 < LF < = 0.50	Hoist is usually subject to very small loads and in exceptional cases only to maximum loads.	3200	200
L2 - Medium (normal) 0.5 < LF < = 0.63	Hoist is usually subject to small loads but rather often to maximum loads.	1600	
L3 - Heavy 0.63 < LF < = 0.80	Hoist is usually subject to medium loads but frequently to maximum loads.	800	
L4 - Heavy 0.80 < LF < = 1.00	Hoist is usually subject to maximum or almost maximum loads.	400	

(*) Operation specifics may warrant modification to these intervals.

■ Periodic Maintenance

While the information in the preceding section is used for major service intervals, many items need to be checked at greater frequency depending on usage. The following information is provided for that purpose, but it is important to note that the information in the preceding section, regarding hours of service, is applicable in all conditions of use. Refer to Table 6 'Periodic Maintenance/Inspection Interval' on page 3.

Table 6: Periodic Maintenance/Inspection Interval

Item	Conditions		
	Normal	Heavy	Severe
Requirements of frequent inspection	Annually	Semiannually	Quarterly
Evidence of loose bolts, nuts, rivets, snap rings	Annually	Semiannually	Quarterly
Evidence of worn corroded, distorted, or cracked parts such as suspension housing, chain attachments, clevises, yokes, suspension bolts, shafts, gears, bearings, pins, rollers, and locking and clamping devices	Annually	Semiannually	Quarterly
Evidence of damage to hook retaining nuts or collars or pins, used to secure the retaining members	Annually	Semiannually	Quarterly
Evidence of excessive wear, or damage, to load wheels	Annually	Semiannually	Quarterly
Evidence of excessive wear on motor or load brake	Annually	Semiannually	Quarterly
Evidence of damage to supporting structure, and/or trolley, if used	Annually	Semiannually	Quarterly
Product and safety label for legibility	Annually	Semiannually	Quarterly
End connections of load chain	Annually	Semiannually	Quarterly

INSPECTION REPORT

Ingersoll Rand MLK Air Hoist

Model Number:	**Date:**
Serial Number:	**Inspected by:**

Reason for Inspection: (Check Applicable Box)

	1. Scheduled Periodic Inspection (___ Quarterly ___ Semiannually ___ Yearly)	**Operating Environment:** Normal ___ Heavy ___ Severe ___
	2. Discrepancy(s) noted during Frequent Inspection	
	3. Discrepancy(s) noted during maintenance	
	4. Other: _____	

Refer to the Product Information and Parts Information Manual and "INSPECTION" section for the general inspection criteria. Also, refer to appropriate National Standards and Codes of Practice. If in doubt about an existing condition, contact the nearest **Ingersoll Rand** distributor or the factory for technical assistance.

COMPONENT	**CONDITION**		**CORRECTIVE ACTION**		**NOTES**
	Pass	**Fail**	**Repair**	**Replace**	
Fasteners					
Gears					
Shafts					
Bearings			---		
Load Bearing Wheel					
Hook Block/Double-Reeved Pocket Wheel					
Chain Guides					
Springs			---		
Covers, Housings					
Hooks			---		
Top	Actual Hook Throat Width: _____ inches / _____ mm (Refer to Table 4 'Load Chain Normal and Discard Length' on page 2 for minimum/maximum acceptable widths.)				
	Hook Twist		---		(maximum 10%)
	Hook Crack Test Method Used: Dye Penetrant _____ Magnetic Particle _____ Other: _____				
Bottom	Actual Hook Throat Width: _____ inches / _____ mm (Refer to Table 4 'Load Chain Normal and Discard Length' on page 2 for minimum/maximum acceptable widths.)				
	Hook Twist		---		(maximum 10%)
	Hook Crack Test Method Used: Dye Penetrant _____ Magnetic Particle _____ Other: _____				
Hook Latch			---		
Brake (100% Load Test)			---		
Brake (Visual Inspection)					
Tail Pin (End Anchor)					
Load Chain:			---		
Working length(s) maximum wear: _____ inches / _____ mm (Refer to Table 4 'Load Chain Normal and Discard Length' on page 2.)					
Supporting Structure					
Labels and Tags			---		
Other Components (List in NOTES section)					

Testing:	**Pass**	**Fail**	**NOTES**
Operational (No Load)			
Operational (100% Load)			
Operational (Maximum Test Load*)			

* Maximum test load should never exceed 125% of rated capacity.
This form may be photocopied and used as an inspection record.

TROUBLESHOOTING

This section provides basic troubleshooting information. Determination of specific causes to problems are best identified by thorough inspections performed by **Ingersoll Rand** trained technicians. The chart below provides a brief guide to common hoist and trolley symptoms, probable causes and remedies.

SYMPTOM	CAUSE	REMEDY
Hoist will not operate.	No air supply to hoist, or too little SCFM or PSIG.	Check PSIG (bar) at valve inlet. Refer to "SPECIFICATIONS" section for correct SCFM (cu.m/min) and PSIG (bar).
	Valve or throttle lever sticking.	Check throttle lever for free movement.
	Pendant malfunction.	Check PSIG (bar) at pendant. Minimum operating pressure in pendant line is 55 psig (3.8 bar).
	Hoist is overloaded.	Reduce load to within rated capacity.
	Motor is damaged.	Repair or replace. See "MAINTENANCE" section.
	Lubricator is low on oil.	Fill lubricator.
	Brake is not releasing.	Check brake release circuit and PSIG (bar) at the brake inlet. (55 PSIG (3.8 bar) minimum).
Load continues to move when hoist is stopped. "UP" direction.	Valve or throttle lever sticking.	Check throttle lever for free movement.
	Dump valves not releasing.	Check pendant hose dump valves.
	Pendant lever sticking.	Check lever and restore free movement.
Load continues to move when hoist is stopped. "DOWN" direction.	Valve or throttle lever sticking.	Check throttle lever for free movement.
	Dump valves not releasing.	Check pendant hose dump valves.
	Brake is slipping.	Check brake springs and brake disc linings for wear. See MAINTENANCE" section.
	Hoist is overloaded.	Reduce load to within rated capacity.
	Pendant lever sticking.	Check lever and restore free movement.
Hoist will not lift rated capacity.	Hoist is overloaded.	Reduce load to within rated capacity.
	No air supply to hoist, or too little SCFM or PSIG.	Check PSIG (bar) at valve inlet. Refer to "SPECIFICATIONS" section for correct SCFM (cu.m/min) and PSIG (bar).
	Main air valve travel is restricted.	Check throttle lever and linkage for free movement.
	Exhaust restricted.	Inspect vents and replace mufflers.
	Motor is damaged.	Check for worn motor bearings, vanes or vane springs.
Reduced speed and/ or capacity.	Old style hoists have filter in inlet nipple which may be plugged restricting air flow.	Install new style inlet nipple with no filter screen.
Hook lowers, but will not raise.	No air supply to hoist, or too little SCFM (cu.m/min).	Check power supply and connections, in power supply line.
	Hoist is overloaded.	Reduce load to within rated capacity.
	Pendant malfunction.	Check PSIG (bar) at air inlet connection on pendant.
Hook can be raised but not lowered.	Brake piston seals leaking.	Install new seals refer to "MAINTENANCE" section.
	Low air pressure.	Check PSIG (bar) at valve inlet. Raise pressure to rated capacity.
	Pendant malfunction.	Check PSIG (bar) at fitting connection on pendant.
Load chain jumps on sheave or is making a snapping sound.	No oil on load chain.	Lubricate load chain. See "LUBRICATION" section.
	Worn or rusted chain.	See "INSPECTION" to determine wear limit. Replace if necessary and lubricate frequently.
	Worn load sheave.	Replace worn parts.
	Capsized Hook.	Correct as described in "MAINTENANCE" section.
	Hoist not in-line with load.	Align hoist with load. Do not "yard" or "side pull".
	Incorrectly reeved load chain.	Check load chain is correctly reeved.
Trolley won't stop or trolley wheels slip.	Damaged beam.	Repair or replace beam.
	Too much oil, grease or paint on track of beam.	Clean off oil, grease or paint.
	Trolley not spaced for beam clearance.	Check trolley spacing. Refer to "INSTALLATION" section.
Air powered trolley does not operate.	Pendant lever sticking.	Check lever and restore free movement.
	No air supply to trolley, or too little SCFM (cu.m/min) or PSIG (bar).	Check PSIG (bar) at trolley valve.
	Control valve is sticking.	See "MAINTENANCE" section.

WARNING

- **Never perform maintenance on the hoist while it is supporting a load.**

  Before performing maintenance, tag controls:

  WARNING - DO NOT OPERATE EQUIPMENT BEING REPAIRED.
- **Only allow personnel instructed in service and repair of this hoist to perform maintenance.**
- **After performing any maintenance on the hoist, dynamically test hoist to 100% of its rated capacity, in accordance with ASME B30.16 standards, before returning hoist to service. Testing to more than 100% of rated capacity may be required to comply with standards and regulations set forth in areas outside of the USA.**
- **Shut off air system and depressurize air lines before performing any maintenance.**
- **Use of other than genuine Ingersoll Rand replacement parts may result in safety hazards, decreased performance and increased maintenance and may invalidate all warranties.**

NOTICE

- **When reading the instructions, refer to exploded diagrams in Parts Information Manuals when applicable.**

Load Chain Care

Keep the chain well lubricated as instructed in the "LUBRICATION" section. Never operate a hoist when the load chain does not flow freely and smoothly into and out of the chain wheel, or when it makes noises indicative of binding or other malfunctions.

Chain Replacement

Refer to "INSPECTION" section for information on load chain inspection. Excessive chain wear cannot be detected by casual observation. The chain is case hardened to a depth of 0.010 in. to 0.012 in. (0.25 to 0.30 mm) and once this case is worn through, wear will progress rapidly and the strength of the chain will be considerably reduced. Further, the chain will no longer fit the chain wheel properly, greatly increasing the chance of malfunction and chain breakage. One chain wheel will outlast several chains if the chain is replaced as recommended. The use of a worn chain will cause the chain wheel to wear rapidly. If the chain is visibly damaged, examine the chain wheel and chain guard. Install a new chain wheel if the old one is visibly worn. Install a new guard if the old one is broken or distorted.

Single Line (fall) Hoists, Method 1

1. Remove the brake spring and piston housing, brake discs and brake plates to expose the brake driver.
2. At the side of the chain wheel opposite the chain anchor bolt, engage the first link of chain in a pocket of the chain wheel FLAT SIDE DOWN (Refer Dwg. MHP3255 on page 6). The weld on the second link must face away from the powered chain wheel. Refer Dwg. MHP0472 on page 7).
3. Rotate the brake driver by hand to thread the chain through the hoist.
4. Keep the chain straight and do not twist it. Attach the free end of the chain using the chain anchor bolt, washers and spacer (Dwg. MHP3256). Clean the brake parts and inspect them for excessive wear before assembling.

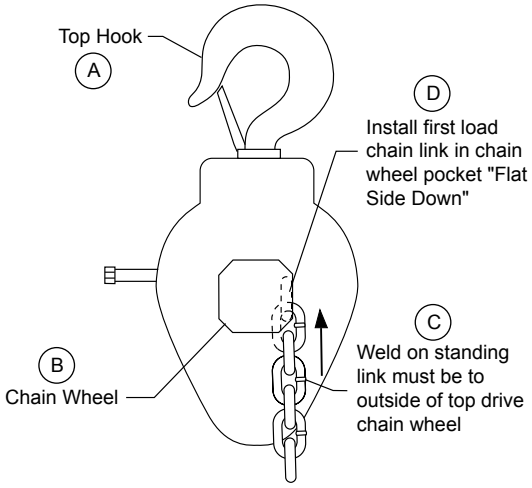

(Dwg. MHP3255)

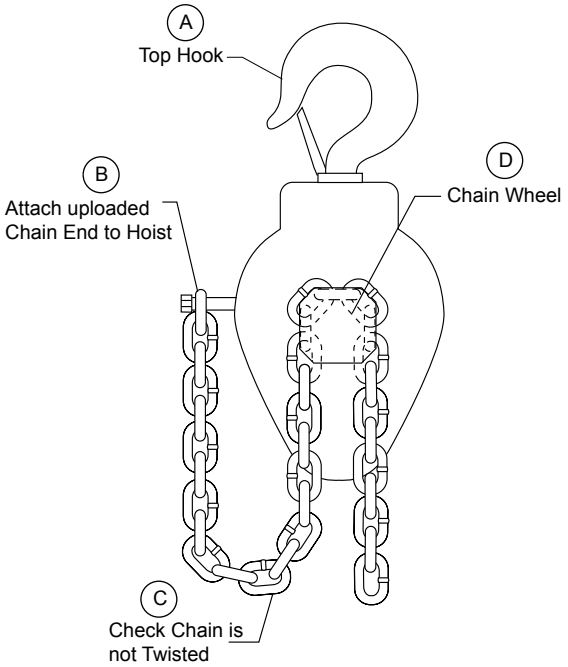

(Dwg. MHP3256)

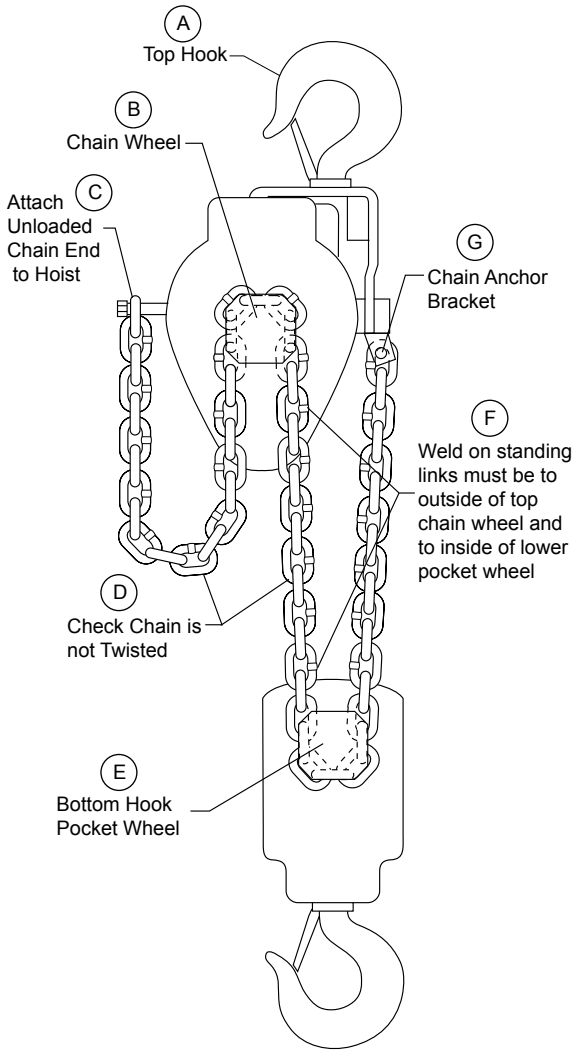

(Dwg. MHP3257)

Double Line (fall) Hoists, Method 1

WARNING

- **The replacement chain for a series MLK double line hoist must have an EVEN number of links.**

1. Install the chain through the chain wheel as in steps 1 through 4 of the instructions for single line Hoist, and attach the end of the chain to the Hoist using the anchor bolt and fasteners. Keep the chain straight.
2. Make certain the chain is straight and feed the end through the bottom hook pocket wheel with the first link ON EDGE WITH THE WELD TO THE INSIDE OF THE IDLER SHEAVE WHEEL.
3. Keep the chain straight and attach the free end to the chain anchor bracket.

Capsized Hook

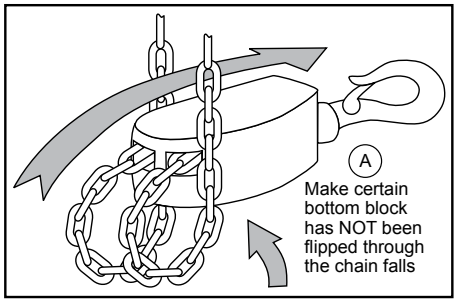

(Dwg. MHP0043)

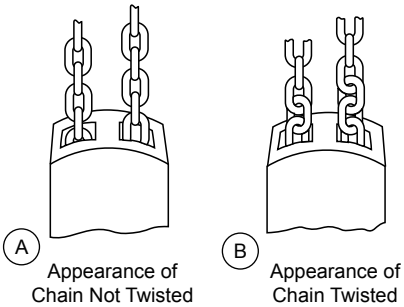

(Dwg. MHP0020)

A. Appearance of Chain Not Twisted; **B.** Appearance of Chain Twisted.

Single or Double Line (fall) Hoists, Method 2

1. On ML250K and ML500K single line Hoists, disconnect the load end of the chain from the bottom hook block. On ML500KR and ML1000K double line Hoists, disconnect the load end of the chain from the chain anchor bracket and withdraw it from the bottom hook sheave block. Do not remove the chain from the Hoist.
2. Using an abrasive wheel, cut a section from the last standing link as shown in Dwg. MHP0471.

CAUTION

- **Do not distort the link in any manner. It must be able to pass over the chain wheel without binding. The last complete link of old chain must be a flat link unless two cut links are used to make the first link of the new chain a flat link.**

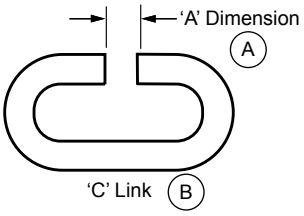

(Dwg. MHP0817)

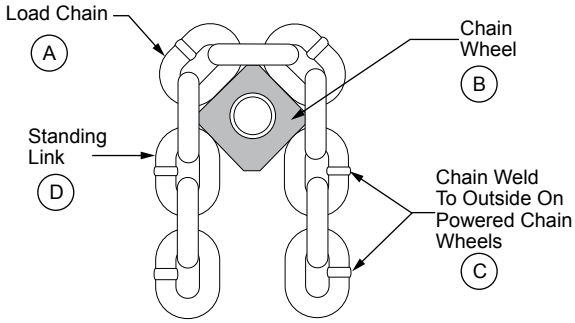

(Dwg. MHP0472)

3. Connect old chain by hooking the end of the new chain onto the cutaway link. Make certain the welds on the standing links (links that are perpendicular to the chain wheel) face away from the powered chain wheel.
4. Slowly run the Hoist in the raise direction, running off the old chain and reeving the new chain over the chain wheel. The first link of new chain over the chain wheel must be a flat link.
5. After the new chain is installed, secure the unloaded end of the chain to the side of the Hoist. Make certain there is no twist in the unloaded end of the chain between the chain wheel and the end link.

WARNING

- **A twisted chain can jam as it passes over the chain wheel, which can result in damage to the Hoist or even breaking the chain causing severe injury, death or substantial property damage.**

6. On single line Hoists, install the stop ring (115) and spring (114) and then attach the bottom hook block assembly.
7. On double line Hoists, reeve the load end of the new chain around the pocket wheel in the sheave block assembly, making certain the chain is not twisted between the hoist and sheave block.

NOTICE

- **The new chain must have an EVEN number of links when the hoist has two chain falls and uses a bottom sheave block.**

8. Keeping the load end of the chain straight, attach the end link to the chain anchor bracket.
9. Lubricate the chain as instructed in the "LUBRICATION" section.
10. Run the hook up and down several times under power with no load to make certain the chain is running smoothly over the chain wheel. There must be no apparent binding or evidence of malfunctioning.

Servicing the Filter and Strainer

1. Disconnect the air supply from the Hoist.
2. Unscrew the air hose from the inlet strainer (42) .
3. Unscrew the inlet strainer from the inlet body (38).
4. Wash the screen inside the inlet strainer clean with a quality, non-toxic, non-flammable commercial solvent in a well ventilated area. If the screen is damaged or cannot be cleaned, replace the inlet strainer.
5. Unscrew the inlet nipple (39) from the valve chest and remove the inlet nipple and inlet body from the valve chest.
6. Push the inlet nipple out of the inlet body.
7. Remove the two swivel inlet seals (40) from the inlet nipple.
8. If the swivel inlet gasket (41) is damaged, replace it.
9. Moisten the new swivel inlet seals with O-ring lubricant and install them in the grooves around the body of the inlet nipple.
10. Push the inlet nipple into the inlet body until the hex of the nipple is flush against the face of the inlet body.
11. Keep the threaded hole of the inlet body facing away from the Hoist and screw the inlet nipple into the valve chest.
12. Screw the inlet strainer into the inlet body.
13. Screw the air hose into the inlet strainer.
14. Reconnect the air supply to the Hoist.

Disassembly

WARNING

- **Disconnect the air supply hose before performing any maintenance or repairs on this Hoist.**

General Instructions

1. The MLK Hoist is constructed of various modules, and during the process of disassembly it is not always necessary to disassemble a particular module just because it is removed from the Hoist. For example, it is necessary to remove the valve chest assembly in order to disassemble the motor. However, the valve chest need not be disassembled unless parts within the valve chest require replacement. Do not disassemble the Hoist any further than necessary to replace or repair damaged parts.
2. Whenever grasping a part in a vise, always use leather-covered or copper-covered vise jaws to protect the surface of the part and help prevent distortion. This is particularly true of threaded members and housings.
3. Do not remove any part which is a press fit in or on a sub-assembly unless the removal of that part is necessary to complete the repair or replacement of the part.

4. Do not disassemble this Hoist unless you have a complete set of new gaskets, O-rings and seals on hand for replacement. These are available in Overhaul Gasket Kit
5. Do not attempt to wash sealed bearings.

Disassembly of Valve Chest

Refer to Dwgs. MHP3238, MHP3241, and MHP3245.
1. If the Hoist has a pendant control, disconnect the three pendant hoses (211) from the elbow and adapters (221 and 222) by loosening the swivel fitting (212).
2. Remove the pendant links (223).
3. Unscrew the valve chest screws (44 and 45) and remove the valve chest (14) and valve chest gaskets (43).
4. Unscrew and remove the swivel inlet assembly. Push the inlet nipple (39) out of the inlet body (38) to expose the swivel inlet seals (40).
5. Unscrew the valve chest cover screws (37) and remove the valve chest cover (33) and valve chest cover gasket (31).
6. Remove the piston and piston shaft assemblies (26 and 28) and piston springs (25).
7. Remove the valve seat lock screws (23).
8. While exerting pressure against the valve seats (20), use retaining ring pliers to remove the valve seat retainers (24).
9. Using a hooked tool, pull the valve seats from the valve chest or tap the bottom of the valve chest on a block of wood.
10. Remove the two valve assemblies (15 and 17) and valve springs (19) from the valve chest.
11. If the piston shaft seals (29) require replacement, press the piston retaining pins (30) from each piston and shaft and slide the pistons off the shafts.

Disassembly of the Brake Mechanism

Refer to Dwg. MHP3243.
1. Unscrew the four shoulder bolts (105) and remove the assembled spring and piston housing (96).
2. If you are going to disassemble the spring and piston housing, proceed as follows:
   a. Remove the plate screws (104) and the plate (103).
   b. Place the assembly, pressure plate (98) downward, on an arbor press or place the assembly vertically in a vise.
   c. While holding the housing against the compression of the springs (97), hold the pressure plate screw (98A) with a wrench and unscrew the piston nut (98B).
   d. Ease up on the arbor press slowly and carefully.
3. Pull off the pressure plate and push the piston (99) from the housing.
4. Withdraw the brake plates (94) and brake discs (95).

Disassembly of the Motor

Refer to Dwg. MHP3240.
1. Remove the entire brake mechanism. Refer to disassembly of the brake mechanism.
2. Remove the brake driver retainer (93) and withdraw the brake driver (92).
3. Remove the assembled valve chest (14). Refer to disassembly of the valve chest.
4. Remove the limit actuator retaining pin (52) and withdraw the limit actuator (51).
5. Unscrew the valve chest plate screws (48) and remove the valve chest plate (46).
6. Grasp the rear end plate (67) and pull the entire assembled motor from the Hoist. If the motor is a little "sticky", tap on the brake end of the motor shaft (64) with a soft drift.

NOTICE

- **If the cylinder dowel (71) separates from the assembled motor, insert a long pin in the dowel pin hole to align the front end plate (72) during removal.**

7. Grasp the motor shaft vertically in copper-covered vise jaws.
8. Remove the motor shaft rear retaining ring (65).
9. Lift off the rear end plate (67) and bearing (66), cylinder (70) cylinder dowel (71), vanes (69), springs (69A), rotor (68), front end plate (72) and bearing (73).

Disassembly of the Gearing

Refer to Dwgs. MHP3242, and MHP3259.
1. Remove the entire brake mechanism. Refer to disassembly of the brake mechanism.
2. Remove the brake driver retainer (93) and withdraw the brake driver (92).
3. Withdraw the brake tube (57).
4. Grasp the brake housing (90) and pull it away from the housing (1) just far enough to expose the two cutout areas at the rear of the housing. Rotate the brake housing until the large diameter of each planet gear (82) is aligned with a cutout area. Withdraw the brake housing, ring gear (88) and planet gear frame assembly as a unit.
5. Remove the ring gear gasket (89).
6. Pull the brake housing (90) from the gear frame bearing (86). If it is a little "sticky", lightly tap on the rear of the planet gear frame (81) with a plastic hammer to loosen it.
7. Pull the ring gear (88) from the brake housing, if required.
8. Using a bearing puller, remove the gear frame bearing (86).
9. Remove the planet gear shafts (85) by pressing them toward the short hub end of the planet gear frame (81).
10. Do not remove the needle bearings (83 or 87) from the planet gears (82) or planet gear Frame unless you have new bearings on hand for installation. A needle bearing is always damaged during the removal process.

Disassembly of the Throttle Lever and Chain Guide

Refer to Dwgs. MHP3238, and MHP3259.
1. Drive out the limit actuator retaining pin (52) and remove the limit actuator (51).
2. Drive out the throttle lever retaining pin (54).
3. Grasp the square end of the throttle shaft (50) and withdraw it from the Hoist.
4. Unscrew the chain guide screws (11) and remove the chain guide (10).

Disassembly of the Chain Wheel and Chain Guard

Refer to Dwgs. MHP3239, and MHP3259.
1. Remove the brake mechanism. Refer to disassembly of the brake mechanism.
2. Remove the valve chest. Refer to disassembly of the valve chest.
3. Remove the motor. Refer to disassembly of the motor.
4. Remove the gearing. Refer to disassembly of the gearing.
5. Remove the throttle lever and chain guide. Refer to disassembly of the throttle lever and chain guide.
6. Using a soft drift, lightly tap the motor end of the chain wheel (76) to drive it out through the brake end of the Housing.
7. Use a bearing puller to remove the chain wheel bearings (77 and 79).
8. Remove the chain guard retaining screws (13A) and remove the chain guard (13).

Cleaning, Inspection and Repair

Use the following procedures to clean, inspect, and repair the components of the hoist.

Cleaning

CAUTION

- **Bearings that are loose, worn or rotate in the housing must be replaced. Failure to observe this precaution will result in additional component damage. Do not use tri-chloroethylene to clean parts.**

Clean all hoist component parts in solvent (except for the brake discs). The use of a stiff bristle brush will facilitate the removal of accumulated dirt and sediments on the gears and frames. If bushings have been removed it may be necessary to carefully scrape old Loctite® from the bearing bores. Dry each part using low pressure, filtered compressed air.

Inspection

All disassembled parts should be inspected to determine their fitness for continued use. Pay particular attention to the following:

1. Inspect all gears for worn, cracked, or broken teeth.
2. Inspect all bushings for wear, scoring, or galling.
3. Inspect shafts for ridges caused by wear. If ridges caused by wear are apparent on shafts, replace the shaft.
4. Inspect all threaded items and replace those having damaged threads.
5. Measure the thickness of the brake discs (95). If the brake discs are less than 0.090 in. (2.29 mm) replace the brake discs (95).
6. Check mufflers (49) for damage or excessive dirt.
7. Check bearings for freeness of rotation and wear. Replace bearings if rotation is rough or bearings are excessively worn.
8. Inspect brake driver bearing wear area on brake driver (92) and in planet gear frame (81) for ridges or galling. If either condition exists replace parts.

Assembly

General Instructions

1. The MLK Hoist is constructed of various modules. The following instructions will first describe how to assemble the individual modules and finally, how to assemble a complete hoist from the assembled modules.
2. Always press on the inner ring of a ball-type bearing when installing the bearing on a shaft.
3. Always press on the outer ring of a ball-type bearing when pressing the bearing in a bearing recess.
4. Always press against the stamped end of a needle-type bearing when installing the bearing in a bearing recess.
5. Whenever grasping a part in a vise, always use leather-covered or copper-covered vise jaws to protect the surface of the part and help prevent distortion. This is particularly true of threaded members and housings.
6. Always clean and wipe every part (except the brake parts) with a thin film of oil before installation.
7. Never wash sealed bearings in solvent or any other cleaner.

Assembly of the Chain Wheel and Chain Guard

Refer to Dwgs. MHP3239, and MHP3259.
1. Place the Chain Guard (13) in position, and install the two chain guard screws (13A) and lockwashers (13B) at 9.5 - 10.8 Nm (7-8 ft-lbs) torque.
2. Place the chain wheel plain end washer (78) on the plain or short hub of the chain wheel (76).
3. Press the chain wheel plain end bearing (77) on the plain or short hub of the chain wheel until it contacts the chain wheel plain end washer.
4. Slide the chain wheel splined end washer (80) over the splined hub of the chain wheel.
5. Press the chain wheel splined end bearing (79) on the splined hub of the chain wheel until it contacts the washer.

Assembly of the Planet Gear Frame

Refer to Dwgs. MHP3242, and MHP3259.
1. Press a new planet gear bearing (83) into each end of the planet gears (82). Seat each bearing 1/64 in. (0.5 mm) below the face of the gear.
2. Work a liberal amount of **Ingersoll Rand** No. 11 Grease into the bore of the planet gear bearings, making certain that each of the individual needles or rollers are covered.
3. Stand the planet gear frame (81) on the table of an arbor press with its short hub upward.

4. Wipe a thin film of **Ingersoll Rand** No. 11 Grease on both faces of one of the planet gears, and place a planet gear thrust washer (84) against each face. The grease will retain it in position.
5. Slide the planet gear, large diameter upward, and thrust washers into one side of the planet gear frame and press in a planet gear shaft (85).

NOTICE

- **The direction of press is important. The holes in the web of the gear frame are slightly tapered to retain the planet gear shaft. Make certain you press the shafts in from the short hub end of the gear frame.**

6. Install the second Planet Gear with its Thrust Washers.
7. Stand the planet gear frame on its short hub and press the gear frame bearing (86), retainer ring first, onto the long hub.
8. Press the brake driver bearing (87) into the bore of the Planet Gear Frame.
9. Work a liberal amount of **Ingersoll Rand** No. 11 Grease into the bore of the brake driver bearing, making certain that each individual needle or roller is covered.

Assembly of the Motor

Refer to Dwg. MHP3240.
1. Install the motor shaft front retaining ring (75) in the annular groove near the center of the motor shaft (64).
2. Press the front end plate bearing (73) into the front end plate (72), and the rear end plate bearing (66) into the rear end plate (67).
3. Slide the front end plate and bearing, bearing side first, down over the motor shaft until it seats against the motor shaft front retaining ring.
4. Slide the rotor (68) counterbored end first down over the motor shaft until it contacts the front end plate.
5. Place a vane (69) and vane spring (69A) in each vane slot in the rotor.
6. Set the cylinder (70) down over the rotor, aligning the dowel hole in the cylinder with the dowel hole in the front end plate.
7. Slide the rear end plate and bearing, flat side first, onto the hub of the motor shaft until it contacts the cylinder. Align the dowel hole in the rear end plate with the dowel hole in the cylinder.
8. Install the motor shaft rear retaining ring (65) in the annular groove on the end of the motor shaft.
9. Insert a 1/8 in. (3 mm) steel guide rod about 3 in. (76 mm) long through the dowel holes in the end plates and cylinder to maintain alignment of parts, and remove the assembly from the vise.

Assembly of the Brake Mechanism

Refer to Dwg. MHP3243.
1. Lightly coat the piston seals (100 and 101) with O-ring lubricant, and install them in their respective grooves on the brake piston (99).
2. Taking care not to cut the seals, slide the piston into the brake spring and piston housing (96).
3. Place the spring and piston housing on the workbench so that the three spring cavities are upward.
4. Place a spring (97) in each cavity.
5. Install the pressure plate screw (98A) so that the screw head enters the counterbore in the pressure plate (98). Place the pressure plate and screw over the springs so that the screw enters the hole in the brake piston.
6. Using a vise, carefully compress the pressure plate against the brake spring and piston housing until the screw or stud protrudes through the piston. Start the piston nut (98B) onto the screw or stud.
7. Remove the assembly from the vise.
8. Tighten the pressure plate screw and piston nut until a 0.006 to 0.012 in. (0.15 to 0.30 mm) gap exists between the pressure plate and piston. See Dwg. MHP0488.

NOTICE

- **Make certain the Piston extends completely through the Spring and Piston Housing and contacts the Pressure Plate.**

9. Place the plate (103) in the recess of the spring and piston housing, and install the plate screws (104) at 2.8 - 3.4 Nm (25- 30 in. lbs) torque.

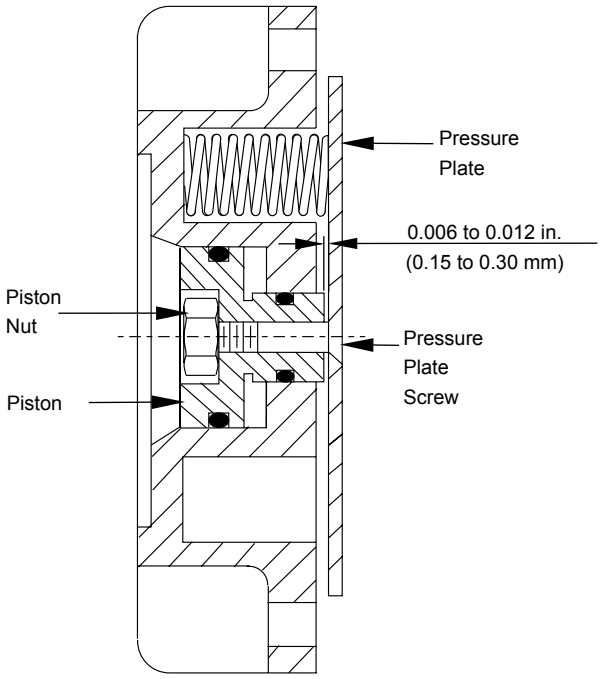

(Dwg. MHP0488)

Assembly of Valve Chest

Refer to Dwgs. MHP3238, MHP3241, and MHP3245.
1. If the valve chest cover pins (32) were removed, install them in the bottom of the valve chest (14).
2. Apply a thin film of O-ring lubricant to the valve seals (16 and 18) and install them on the valves (15 and 17).

CAUTION

- **Do not substitute any other O-rings for these Seals.**

3. Install a Valve Spring (19) on the non-tapered end of each Valve and insert the Valves, Valve Spring first, into the openings at the bottom of the Valve Chest. Valves are marked UP or DOWN, to indicate function. The opening in the Valve Chest is marked, either or ↑ ; or↓ UP VALVE or DOWN VALVE. Make certain the proper valve is inserted into the correct opening.
4. Apply a thin film of O-ring lubricant to the valve seat shaft seals (22) and install one seal in each valve seat (20).
5. Apply a thin film of O-ring lubricant to the valve seat seals (21) and install two seals on each valve seat.
6. Align the smaller diameter cross-hole of the valve seat with the threaded hole in the side of the valve chest for the valve seat lock screw (23). With the hub end trailing, install the valve seats in the valve chest.
7. Screw the valve seat lock screws (23) into the valve chest. Make certain they enter the valve seats and torque the screws (23) to 2.7 - 3.1 Nm (24 - 27 in-lb).
8. Using retaining ring pliers and applying pressure to the hub of the valve seat, Install the valve seat retainers (24). Make certain the retainers seat in the grooves of the valve chest
9. If the pistons (26) were separated from the piston shafts (28), apply a thin film of O-ring lubricant to each piston shaft seal (29) and install them in the grooves of the piston shafts.
10. Slide the pistons onto the piston shafts with the small hub of the piston toward the smallest diameter of the shaft. align the cross-hole in each piston with the crosshole in each shaft and install the piston retaining pins (30).
11. Apply a thin film of O-ring lubricant to the piston seals (27) and install one on each piston.
12. Apply a thin coat of O-ring lubricant on the piston cylinder walls and insert the Piston springs (25) into the valve chest against the valve seat retainers.
13. Install the assembled pistons and shafts in the valve chest.
14. Apply a thin coat of O-ring lubricant to the valve chest cover seals (34) and install them in the valve chest cover (33).
15. Align the valve chest cover gasket (31) with the valve chest cover pins and place the gasket against the valve chest.
16. Align the valve cover with the valve chest cover pins and piston shafts and place the cover against the valve chest.
17. Install the six valve chest cover screws (37) and torque them evenly to 9.5- 10.8 Nm (7-8 ft-lbs).
18. Thread the adjustment screw locknuts (36) onto the bleed adjustment screws (35) and install the screws in the valve chest cover.

NOTICE

- **These Screws will require adjustment on Hoists having a pendant control. Refer to adjustment of bleed screws on pendant control models in "INSTALLATION" section of Product Information Manual.**

19. Manually work the piston shafts up and down to ensure there is no binding of parts.

Assembly of Hoist

1. Place the chain guard (13) in position in the housing (1), and install the two chain guard screws (13A) and lockwashers (13B) at 9.5 - 10.8 Nm (7-8 ft-lbs) torque.

2. Install the assembled chain wheel (76), small bearing end first, into the brake end of the housing (1). Tap the chain wheel lightly on its trailing end to make certain the plain end bearing (77) is fully seated.
3. Install a brake housing bolt seal (90A) into each of the four bolt holes in the brake housing (90) so that the tapered end of each Seal faces the shoulder side of the brake housing.
4. Align the bolt holes in the flange of the ring gear (88) with the bolt holes in the brake housing, and press the ring gear, flange side first, onto the shoulder of the brake housing.

CAUTION

- **It is very important that the planet gears (82) and ring gear be aligned when the gear frame assembly is inserted into the ring gear.**

5. Align the gearing as follows:
   a. Stand the ring gear and brake housing upright.
   b. Align the arrows and scribe lines on the faces of the planet gears in a straight line as shown in Dwg. MHP3299.
   c. While maintaining this alignment, insert the gear frame assembly, bearing end first, into the ring gear seating the gear frame bearing (86) in the brake housing.

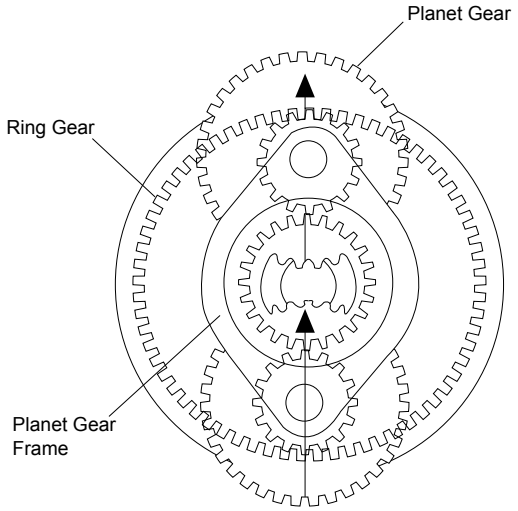

(Dwg. MHP3299)

6. Apply a thin film of grease on the ring gear gasket (89) and place the gasket on the face of the ring gear.
7. While holding the entire assembly so that the planet gears (82) are aligned with the cutout areas in the housing (1), install the assembly in the housing so that the splined hub of the gear frame engages the splined hub on the chain wheel.
8. Place the motor retaining washer (63) dished (concave) side first, against the front end plate and engage the dowel hole in the washer with the guide rod.
9. While aligning the guide rod with the dowel hole in the bottom of the housing bore, slide the assembled motor into the housing so that the motor shaft (64) passes through the chain wheel and meshes with the planet gears.
10. Withdraw the guide rod from the motor and install the cylinder dowel (71) so tapered end enters first.
11. Insert the Mufflers (49) into the recess in the valve chest plate (46).
12. Place the housing gasket (9) onto the motor end of the housing and install the valve chest plate with the valve chest plate screws (48) at 9.5 - 10.8 Nm (7-8 ft-lbs) torque.
13. Slide the brake driver (92) on the splined end of the motor shaft and install the brake driver retainer (93).
14. Manually, rotate the brake driver several revolutions to make certain the planet gears are properly aligned and properly meshed with the motor shaft and the motor rotates freely.
15. Insert the brake tube (57) in the hole in the boss at the upper right-hand corner of the brake housing and install a brake tube seal (58) on each end of the brake tube.
16. Place a brake plate (94) followed by a brake disc (95), brake plate, brake disc and two brake plates over the brake driver, aligning the notches in the brake plates with the bolt holes in the brake housing and main housing.

NOTICE

- **Brake discs and brake plates must be free from oil and grease. This may cause the brake to slip.**

17. Insert the brake tube housing seal (59) into the hole in the boss of the brake spring and piston housing (96). Install the assembled brake spring and piston housing, making certain that the brake tube enters the hole in the base on the housing. Align the bolt holes in the brake spring and piston housing with those in the brake housing and install the four shoulder bolts (105) and lockwashers (106). Torque to 23 - 27 Nm (17 - 20 ft-lbs).
18. Stand the Hoist upright on the brake end. Place the valve chest gasket (43) on the valve chest plate, making certain that the small flapper is properly positioned in the recess between the two ports.

CAUTION

- **If the valve chest gasket is flipped over, the flapper will not be in the recess between the two ports, and the brake will not release.**

19. Center the two round rubber discs in corresponding recesses in the valve chest plate.
20. Place the assembled valve chest (14) on the valve chest gasket, and install the valve chest screws (44 and 45) at 9.5 - 10.8 Nm (7-8 ft-lbs) torque.
21. Position the chain guide (10) underneath the chain wheel, and install the chain guide screws (11) at 2.9 - 3.6 Nm (26 - 32 in. lb) torque.
22. Place the throttle shaft spring (56) over one hub of the throttle lever (53) so that the bent leg of the spring is toward the inside of the throttle lever.
23. Hold the throttle lever in the housing recess beneath the chain wheel so that the throttle shaft spring is toward the valve chest end of the Hoist and the legs of the spring engage a rib on the bottom of the chain guide. Place a throttle lever thrust washer (55) at each end of the throttle lever bore, and insert the throttle shaft (50) round end first, through the valve chest plate, housing and throttle lever. Install the throttle lever retaining pin (54). throttle shaft (50) has two cross holes. On MLK hoists ensure throttle lever retaining pin (54) locates in the hole nearest the stepped end of the throttle shaft (50).
24. Place the limit actuator (51) on the square end of the throttle shaft, and install the limit actuator retaining pin (52).
25. Install the two pendant links (223) between the limit actuator and the valve shafts.
26. Apply a thin film of O-ring lubricant to the two swivel inlet seals (40) and install them in the grooves of the inlet nipple (39).
27. Being careful to prevent cutting the seals, push the inlet nipple into the inlet body (38).
28. Apply a thin film of O-ring lubricant to the swivel inlet seal (41) and install the seal on the nipple.
29. Thread the inlet assembly into the top of the valve chest and tighten it at 5.6 - 6.8 Nm (50 - 60 in. lb) torque.
30. Thread the inlet strainer (42) into the inlet body and tighten it.

Load Chain Anchoring

1. Chain Anchor Bolt (107) should be torqued to 9.5 - 10.8 Nm (7 - 8 ft-lbs)

Pendant Installation

WARNING

- **Disconnect the hoist from the air supply before installing this pendant control kit.**

When installing pendant assembly on an MLK Hoist, a crimping tool or compatible grooving tool must be used to install the clamping sleeve (216) on the either end of the strain relief cable (215).

The strain relief cable (215) must be long enough to allow the pendant hose to hang nearly straight yet short enough to absorb the pendant weight and forces.

When the control hoses are cut to length, the hose at the rear of the handle should extend 6 in. (150 mm) beyond the top clamping thimble. With an MLK-A545A valve chest, the two hoses at the front of the handle should extend 2 in. (51 mm) beyond the top clamping thimble (217).

Install one hose tie (218) above the pendant handle (200) and one hose tie below the clamping thimble (217). Install the remaining hose ties every 2-1/2 feet (0.76 m) between the hose ties at the handle and thimble.

When installing the warning plate (219), ensure the plate can be read from the lever side of the pendant handle.

Load Test

Prior to initial use, all new, extensively repaired, or altered hoists shall be load tested by or under the direction of a qualified person, and a written report furnished confirming the rating of the hoist. Dynamically load test hoist to 100% of its rated capacity in accordance with ASME B30.16 standards. Testing to more than 100% may be necessary to comply with standards and regulations set forth in areas outside of the USA.

SERVICE NOTES

Distributed by Tri-State Equipment Company Inc.
sales@tsoverheadcrane.com
www.tsoverheadcrane.com
Tel: (314) 869-7200

Ingersoll Rand®

Form P6778
Edition 4
August 2013
03534526

Pendant Throttle Handle Assemblies

Single Motor	Two Motor	Three Motor
No. C6H20A-A169B	No. C6H20A-A122B	No. C6H20A-A132B
No. MLK-A269A	No. HRA-A122B	No. HRA-A132B
No. MR-269A	No. MR-A122A	No. MR-A132A
	No. PILOT-A122B	No. PILOT-A132B

Parts Information

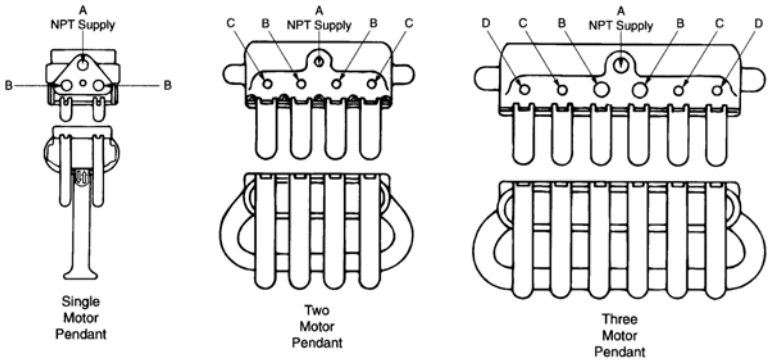

(Dwg. TPC492)

Save These Instructions

Ingersoll Rand

Pendant Assembly Sectional Diagram

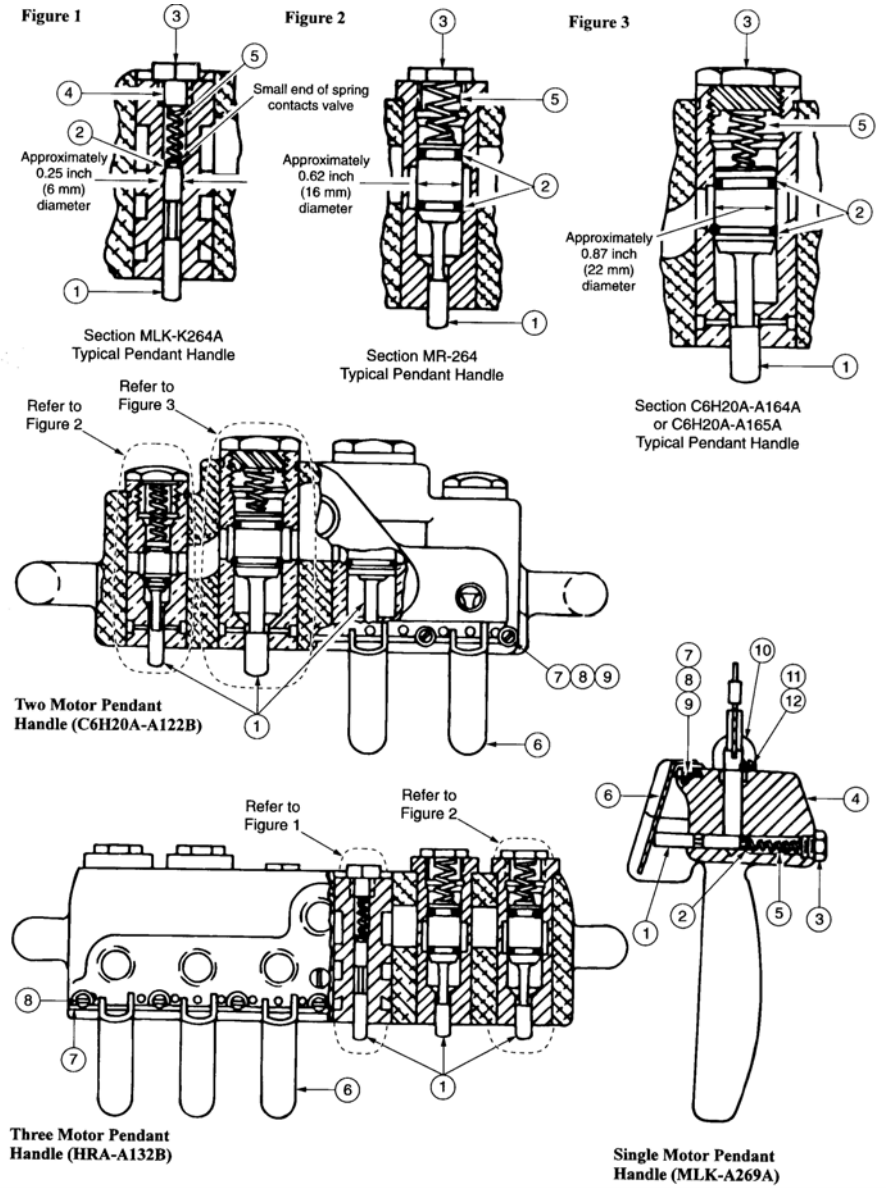

(Dwg. TPB788)

Pendant Assembly Parts List

Single Motor Pendants

Item	Part Description	Qty Total	Part Number		
			C6H20A-A169B	MLK-A269A	MR-269A
1	Throttle Valve	See ( )	C6H20A-A164A (1)	MLK-K264A (2)	MR-264 (2)
			C6H20A-A165A (1)	---	---
2	Throttle Valve Seal	See ( )	C620C-289 (4) *	R000BR1C-283 (2) ***	AF120-89 (4) **
3	Throttle Valve Cap	2	C6H20A-180A *	MLK-266A **	D02-180A ***
4	Valve Cap Gasket	2	---	MLK-504 *	---
5	Throttle Valve Spring	2	C6H20A-308 *	MLK-51A **	D01-51A ***
6	Throttle Lever	2	C6H20A-273A	MLK-273	MR-273
7	Throttle Lever Pin	1	C6H20A-281A	DLC-120A	
8	Lever Pin Screw	2	---	HRE20A-68	MLK-SR662
9	Lever Pin Lockwasher	2	---	D02-138	
10	Strain Relief Anchor	1	MR-15	MLK-450	---
11	Relief Anchor Screw	See ( )	H54U-561 (1)	HRE20A-68 (2)	---
12	Lockwasher	2	---	H54U-352	---

Two Motor Pendants

Item	Part Description	Qty Total	Part Number			
			C6H20A-A122B	HRA-A122B	MR-A122A	PILOT-A122B
1	Throttle Valve	See ( )	C6H20A-A164A (1)	MLK-K264A (2)	MR-264 (4)	MLK-K264A (4)
			C6H20A-A165A (1)	---		
			MR-264 (2)		---	
2	Throttle Valve Seal	See ( )	C620C-289 (4) *	R000BR1C-283 (2) ***	---	R000BR1C-283 (4) ***
			AF120-89 (4) **		AF120-89 (8) **	---
3	Throttle Valve Cap	See ( )	C6H20A-180A (2) *	MLK-266A (2) **	D02-180A (4) ***	MLK-266A (4) **
			D02-180A (2) ***			
4	Valve Cap Gasket	See ( )	---	MLK-504 (2) **	---	MLK-504 (4) **
5	Throttle Valve Spring	See ( )	C6H20A-308 (2) *	MLK-51A (2) **	D01-51A (4) ***	MLK-51A (4) **
			D01-51A (2) ***			
6	Throttle Lever	4	C6H20A-273A	MR-273		
7	Throttle Lever Pin	1	C6H20A-125A	D02-125A		
8	Lever Pin Screw	5	MLK-SR662			
9	Lever Pin Lockwasher	5	D02-138			
10	Strain Relief Anchor	1	MR-15			
11	Relief Anchor Screw	1	H54U-561			

Three Motor Pendants

Item	Part Description	Qty Total	Part Number			
			C6H20A-A132B	HRA-A132B	MR-A132A	PILOT-A132B
1	Throttle Valve	See ( )	C6H20A-A164A (1)	MLK-K264A (2)	MR-264 (6)	MLK-K264A (6)
			C6H20A-A165A (1)	---		
			MR-264 (4)		---	
2	Throttle Valve Seal	See ( )	C620C-289 (4) *	R000BR1C-283 (2) ***	AF120-89 (12) **	R000BR1C-283 (6) ***
			AF120-89 (8) **			
3	Throttle Valve Cap	See ( )	C6H20A-180A (2) *	MLK-266A (2) **	D02-180A (6) ***	MLK-266A (6) **
			D02-180A (4) ***			
4	Valve Cap Gasket	See ( )	---	MLK-504 (2) **	---	MLK-504 (6) **
5	Throttle Valve Spring	See ( )	C6H20A-308 (2) *	MLK-51A (2) **	D01-51A (6) ***	MLK-51A (6) **
			D01-51A (4) ***			
6	Throttle Lever	6	C6H20A-273A	MR-273		
7	Throttle Lever Pin	1	C6H20A-135A	D02-135A		
8	Lever Pin Screw	7	MLK-SR662			
9	Lever Pin Lockwasher	7	D02-138			
10	Strain Relief Anchor	1	MR-15			
11	Relief Anchor Screw	1	H54U-561			

* Used with C6H20A-A164A and C6H20A-A165A Throttle Valves.
** Used with MLK-K264A Throttle Valves.
*** Used with MR-264 Throttle Valves.

Throttle valves (item 1) are provided with valve seals (item 2).

Part List Information

A complete Pendant Throttle Assembly can be ordered by specifying the assembly part number listed at the top of the 'Part Number' columns of the "PARTS LIST" section. When ordering individual parts, specify the part numbers as listed in the column listings below the Pendant Throttle Assembly type.

NOTICE

Some Pendant Throttle Assemblies are made up of more than one type of Throttle Valve (item 1). For example: the two motor pendant, C6H20A-A122B Throttle Valve (item 1) requires one part C6H20A-A164A, one C6H20A-A165A and two MR-264. To determine parts information refer to Figures 1, 2 and 3 of Dwg. TPB788.

When assembling a C6H20A-A169B, C6H20A-A122B or a C6H20A-A132B Pendant Throttle Assembly, be sure to use both a C6H20A-A164A Raise Valve and a C6H20A-A165A Lower Valve. Ensure they are installed in their correct locations.

Note: Apply DOW-CORNING #55 Lube or equal to O-Rings prior to Assembly.

CAUTION

Improper installation of the C6H20A-A164A Raise Valve and C6H20A-A165A Lower Valve will adversely affect Pendant Throttle operation. Ensure each valve is properly installed in their correct location. Refer to Dwg. TPD788.

Refer to Dwg. TPD992 to identify the difference between the valves.

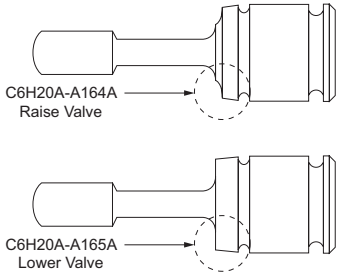

(Dwg. TPD992)

Parts and Maintenance

When the life of the tool has expired, it is recommended that the tool be disassembled, degreased and parts be separated by material so that they can be recycled.

Tool repair and maintenance should only be carried out by an authorized Service Center.

Refer all communications to the nearest **Ingersoll Rand** Office or Distributor.

Manuals can be downloaded from www.irtools.com.

Distributed by Tri-State Equipment Company Inc.
sales@tsoverheadcrane.com
www.tsoverheadcrane.com
Tel: (314) 869-7200