COLLISION AVOIDANCE SYSTEMS

REFLX® 45, REFLX® 120, AND LASERGUARD™2

Magnetek's portfolio of Distance Detection and Collision Avoidance Systems prevent crane-to-crane or crane-to-end-stop collisions.

Avoiding collisions means increased operator safety and reduced maintenance costs. These systems are ideal for use with all types of cranes with either adjustable frequency drives, soft starters, or contactor controls. Three systems with multiple configurations are available so you can choose the exact functionality, size, and style to fit your application needs.

REFLX 45

The ReFlx 45 is a cost-effective system, ideal for a single stop action. All electronic components are built into one housing, enabling easy installation on overhead material handling applications.

- 3-45 foot detection range*
- IP67 rating for indoor and outdoor† applications
- 24-240 VAC, 12-240 VDC
- System includes a sensor, 2 x 2 ft. reflector, and sensor bracket
- LEDs indicating power and range allow for simple set-up and troubleshooting
- Adhesive reflector is standard for convenient placement
  - Optional DIN rail for mounting simplifies retrofit installations in harsh environments

REFLX 120

Magnetek's ReFlx 120 system features a reliable, solid-state control board in a small, easy-to-install enclosure. The most commonly wired configuration is the use of a two-channel sensor for adjustments to give separate outputs for each channel.

- 20-120 foot detection range*
- IP65 rating for indoor and outdoor† applications
- 120 or 240 VAC
- System includes a sensor, sensor cable, 2 x 2 ft. reflector, and controller
- Can be removed from its enclosure and mounted on an existing control panel

LASERGUARD2

The next generation LaserGuard2 is the most technologically advanced system available, using self-monitoring optical lasers to check your crane's position. Its multi-distance detection feature is flexible enough to manage crane-to-crane and crane-to-wall operation.

- 8 inches to 150 foot detection range*
- IP65 rating for indoor and outdoor† applications
- 85-264 VAC and 120-370 VDC, or 9-36 VDC (optional)
- System includes a laser support unit, 2 x 2 ft. reflector, laser, mounting bracket, and sensor cable
- Can be adjusted for three individual contact closures within the detection range
- Pushbutton programming makes it easy to use
- Visible red light provides easy alignment and quick set-up

* Runway length may be greater than detection range

† System may not operate properly in direct sunlight or inclement weather conditions

MAGNETEK
MATERIAL HANDLING

YOUR ONE-STOP SOURCE FOR MATERIAL HANDLING CONTROL SOLUTIONS

Collision Avoidance System Installations

REFLX 120

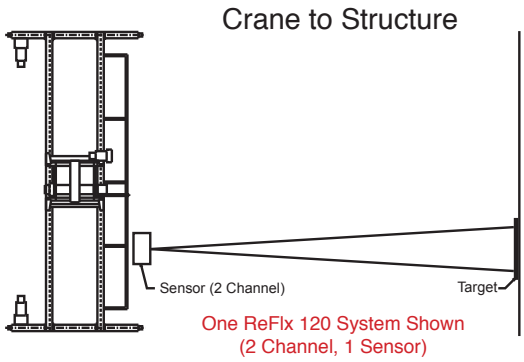

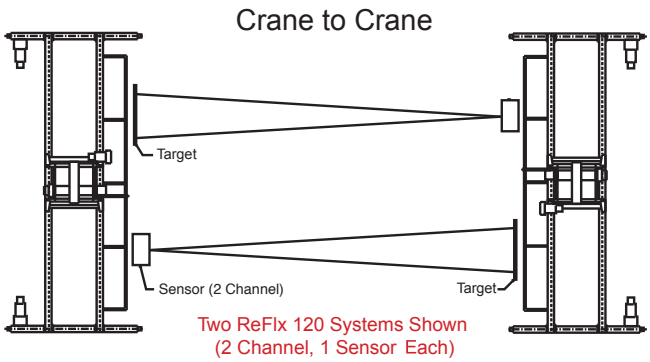

REFLX 45

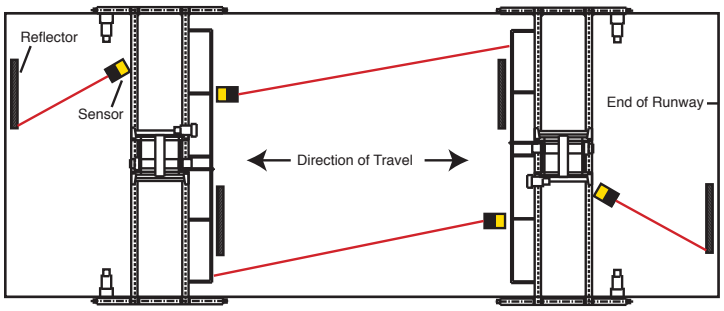

LASERGUARD2

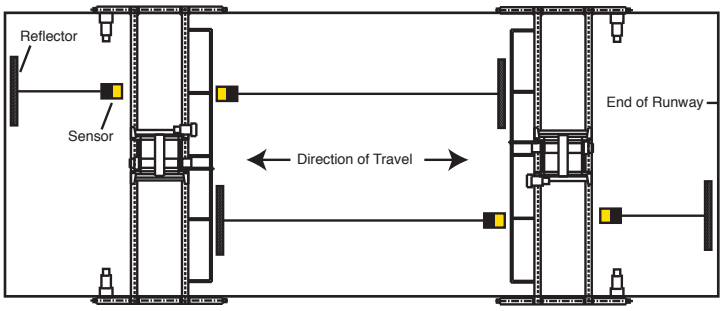

For more information, contact TSOC Sales at 314-869-7200.

MAGNETEK
MATERIAL HANDLING

N49 W13650 Campbell Drive
Menomonee Falls, WI 53051

Distributed by Tri-State Equipment Company Inc.
sales@tsoverheadcrane.com
www.tsoverheadcrane.com
Tel: (314) 869-7200

© Magnetek, Inc. 2015